Rating	10A 14V DC
Contact Resistance	50m ohm Max.
Insulation Resistance	DC 500V 100M ohm Min.
Dielectric Strength	AC 1500V 1 minute
Operation Temperature	-25°C~+85°C
Switch Function	2P SPST ON-OFF

Mounting Hole

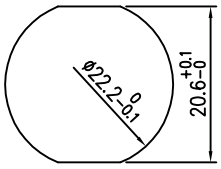

Circuit Diagram

ON	OFF
	

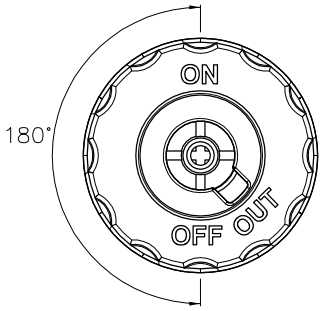

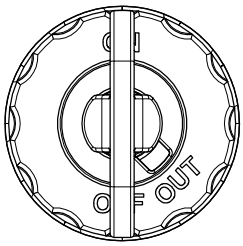

＊MATERIAL:
Housing: Black, Nylon 66+33%GF.
Key: Red, Nylon 66 .
Bottom: Black, PBT+15%GF.
Nut: Black, POM.
Screw: Ni-plated, Brass

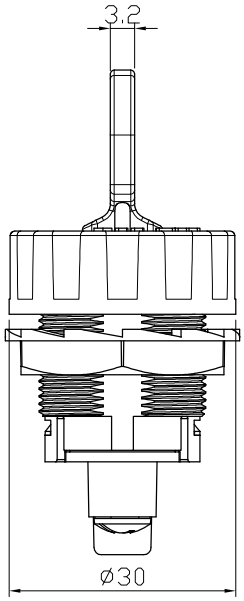

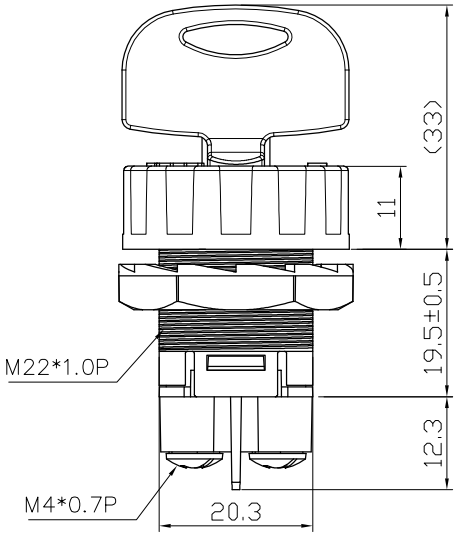

原稿
2023/10/12
研發部

Laser Logo & Date code
(WWYY)

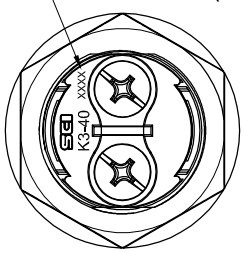

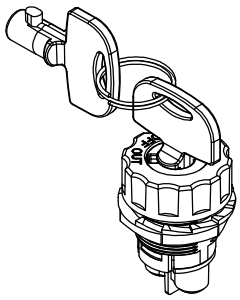

tolerances Unless otherwise specified ±0.3

							△	
							△	
Date	Name	Descriptions					NO	
Drawn	Checked	Approved	SCI BOM No.	1840238		Model Name	Key Switch	
Jam Chan	許庭禎	余啟明	Customer No.			Model No.	K3-40	REV.
5/10/'23	2023/09/12	2023/09/13	Unit	mm	SHIN CHIN INDUSTRIAL CO., LTD.			0