Notes: (Unless Otherwise Specified)

1. Waterproof Rate : IP67.
2. RoHS Compliant.

REV	ECN#	DESCRIPTION OF REVISION	DRAW BY DATE	CHECK BY DATE	APPROVE BY DATE
01			Lucas 12/05/24	Lucas 12/05/24	Ray 12/05/24

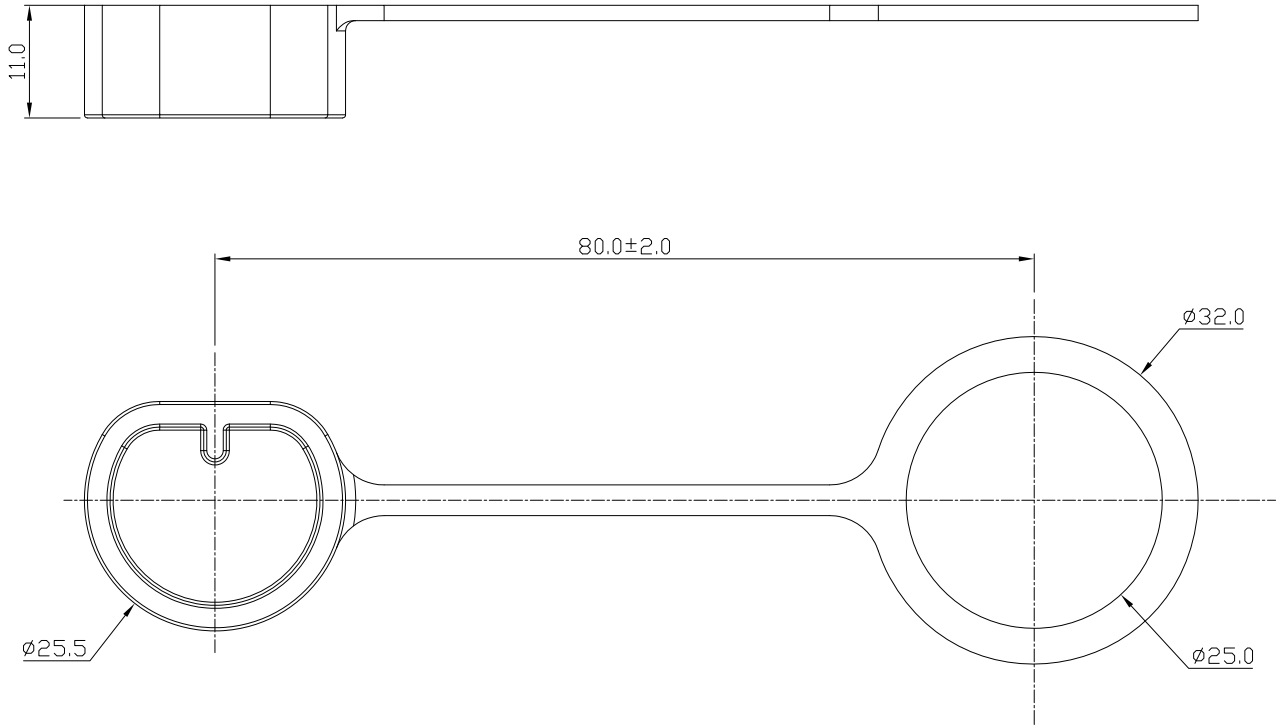

GTC
DOC.CENTER.ISSUE
DEC.05.2024
ONLY FOR RELEASE

Item	Part Name	Material / Finish	Q'ty
1	Cap	Silicone Color: Black	1

TITLE	DRAWING NUMBER	REV.
Cap For M25 Male With Chain	GT5CE24022	01

DO NOT SCALE DRAWINGS	SIZE	SCALE	DRAW / DATE	CHECK / DATE	APPROVE / DATE	TOLERANCES	UNIT	SHEET
THIRD ANGLE PROJECTION	B	1:1	Lucas 12/05/24	Lucas 12/05/24	Ray 12/05/24	X.X ± 0.5 X.XXX ± 0.05 X.XX ± 0.2 ANGLES ± 1°	mm	1/1

GT Contact CO.,LTD

NOTICE OF PROPRIETARY PROPERTY:

THE INFORMATION CONTAINED HEREIN IS THE PROPRIETARY PROPERTY OF GT Contact CO.,LTD THE POSSESSOR AGREES TO THE FOLLOWING:
(i) TO MAINTAIN THIS DOCUMENT IN CONFIDENCE
(ii) NOT TO REPRODUCE OR COPY IT
(iii) NOT TO REVEAL OR PUBLISH IT IN WHOLE OR PART
(iv) ALL RIGHTS RESERVED