C2-398 LED Work Light

9-33VDC | Wide Beam | 4800lm | 32W | IP67/ 69K



Designed for:

Specialist Vehicle

Agriculture & Construction

The C2-398 is a heavy-duty LED work light designed for demanding environments. It features an aluminium housing and a polycarbonate lens, with four 10W LEDs providing an effective 1800lm of bright and uniform illumination. Operating within a voltage range of 9-33VDC, it consumes 32W of power, ensuring reliable lighting with low energy usage. The light is designed to withstand harsh conditions, with an IP67/IP69K rating for protection against dust, water, and chemicals, and it offers excellent 10G shock resistance. Approved under ECE R10 and ISO 13766, it meets international standards for electromagnetic compatibility. This work light is ideal for use in specialist, agricultural, construction, and mining vehicles. Overheat, reverse polarity and over voltage protected

9-33VDC | **Wide Beam** | **4800lm** | **32W** | **IP67 / IP69K**

Dimensions (mm)

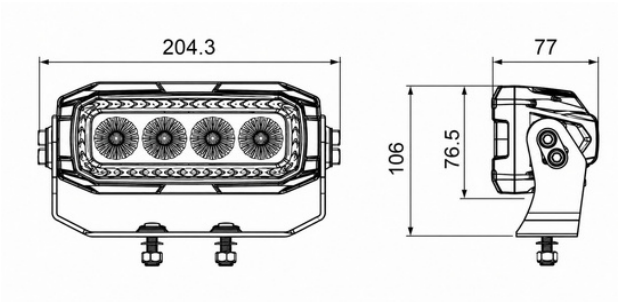

Beam Pattern 2.5m at 10°

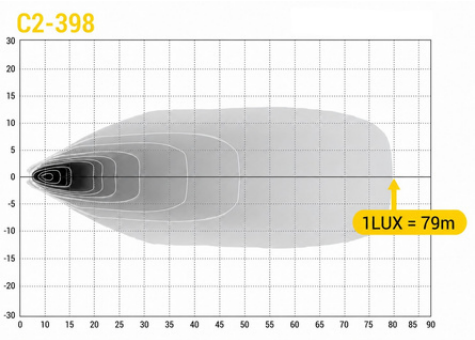

Specifications

Housing Shape	Rectangular	Beam Pattern	Flood
Raw Lumen Output	4800lm	Effective Lumen Output	1800lm
Colour Temperature	5700K	Voltage	9-33VDC
Nominal Current at	2.7A@12V ~ 1.35A@24V	Power Consumption	32W
IP Rating	IP67 IP69K	Shock Resistance	10G
Operating Temp Range	-30°C...+65°C	Housing Material	Aluminium
Lens Material	Polycarbonate	Dimensions	204.3 x 106 x 77mm
Mounting Style	Double bolt Trunnion	Termination	235mm wire or Deutsch DT04-2P connector
EMC	ECE R10, ISO13766	Approvals	-

Lucid Electronics Limited is an appointed SCI sales agent
Unit 425 Bedford Heights, Manton Lane, Bedford, MK41 7PH | Company Number 10385887 | VAT 262 6152 16
UK Office: +44 (0)1234 380226 | France Office: +33 (0) 7 67 38 35 67 | Email info@lucidelectronics.com | web: www.lucidelectronics.com