C2-392B LED Work Light

10-33VDC | Wide Beam | 10,000lm | 60W | IP68 / 69K



Designed for:

Specialist Vehicle

Agriculture & Construction

The C2-392B series of high-power LED work lights are designed for demanding environments, featuring a robust aluminium housing and a UV resistant polycarbonate lens. It has a rectangular shape and operates within a voltage range of 10-33VDC. The light features up to fourteen LEDs, delivering strong, uniform light patterns with an effective lumen output of up to 5100lm. A power consumption of 60W ensures it provides a strong, bright and reliable flood light with a beam distance of 135m. The C2-392B is built to withstand tough conditions, Ingress protection to IP68/IP69K rating for protection against dust, water, and chemicals allowing the unit to withstand high temperature and high pressure washdowns. It offers excellent shock resistance, and a 10G vibration resistance. It is approved under CISPR25 Class3, ECE R10 and ISO13766, ensuring compliance with electromagnetic compatibility standards. This work light is terminated with a 340mm cable and Deutsch DT04-2P connector. The C2-392 series offers search. flood, and wide flood beam patterns. Overheat, reverse polarity and over voltage protected

10-33VDC | **Narrow Beam** | **10000lm** | **60W** | **IP68 / 69K**

Dimensions (mm)

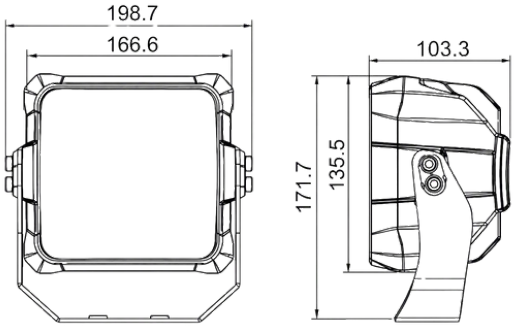

Beam Pattern 1m at 0°

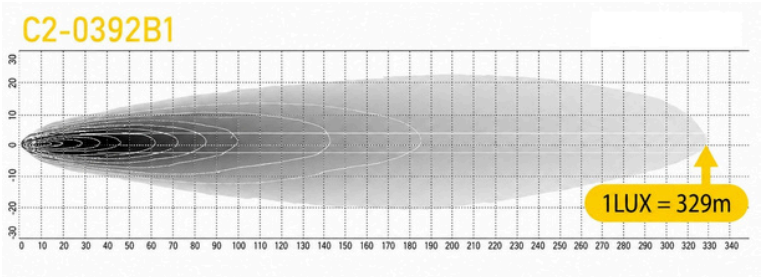

Beam Pattern 2.5m at 10°

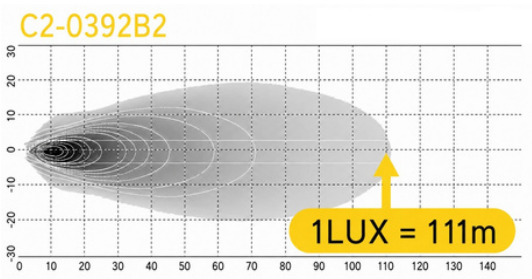

Lucid Electronics Limited is an appointed SCI sales agent
Unit 425 Bedford Heights, Manton Lane, Bedford, MK41 7PH | Company Number 10385887 | VAT 262 6152 16
UK Office: +44 (0)1234 380226 | France Office: +33 (0) 7 67 38 35 67 | Email info@lucidelectronics.com | web: www.lucidelectronics.com

C2-392B LED Work Light

10-33VDC | Wide Beam | 10,000lm | 60W | IP68 / 69K

Specifications

Housing Shape	Rectangular	Beam Pattern	Narrow / Flood Flood
Raw Lumen Output	10,000lm	Effective Lumen Output	5100lm
Colour Temperature	5700K	Voltage	10-33VDC
Nominal Current at	5A@12V ~ 2.5A@24V	Power Consumption	60W
IP Rating	IP68 / IP69K	Shock Resistance	10G
Operating Temp Range	-30°C...+65°C	Housing Material	Aluminium
Lens Material	Polycarbonate	Dimensions	198.7 x 171.7 x 103.3mm
Mounting Style	Double bolt Trunnion	Termination	Deutsch DT04-2P connector or 340mm wire
EMC	ECE R10, ISO13766, CISPR25 Class3	Approvals	-