C2-388D LED Work Light

10-33VDC | Wide Beam | 7350lm | 50W | IP68 / 69K



Designed for:

Specialist Vehicles

Agriculture & Construction

The C2-388D is a large oval LED work light designed for durability and efficiency. It features an aluminium housing and a polycarbonate lens. Six LEDs provide an effective 4700lm output of bright and uniform illumination. Operating within a voltage range of 10-33VDC, it consumes 50W of power, ensuring reliable lighting with low energy usage. The light is designed with excellent shock resistance offering an IP68/IP69K ingress protection rating for protection against dust, water, and chemicals ensuring suitability for the harshest of environments. Approved under ECE R10, ISO 13766, and CISPR 25 Class 3, it meets international standards for electromagnetic compatibility. These upright mounted work lights come with either a narrow beam offering up to 270m beam distance or flood types as standard, It is ideal for use in specialist, agricultural, and construction vehicles for auxiliary off road driving lights. Overheat, reverse polarity and over voltage protected

10-33VDC **Wide Beam** **7350lm** **50W** **IP68 / 69K**

Dimensions (mm)

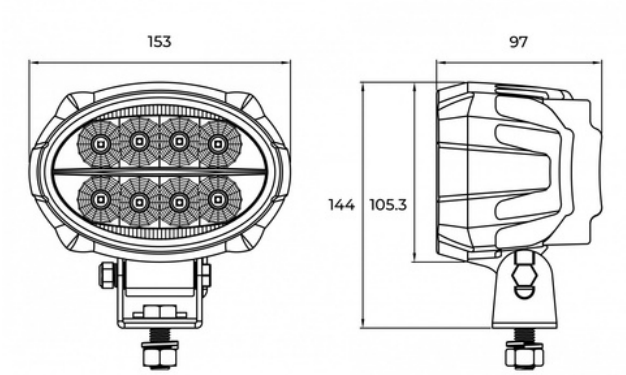

Beam Pattern 2.5m at 10°

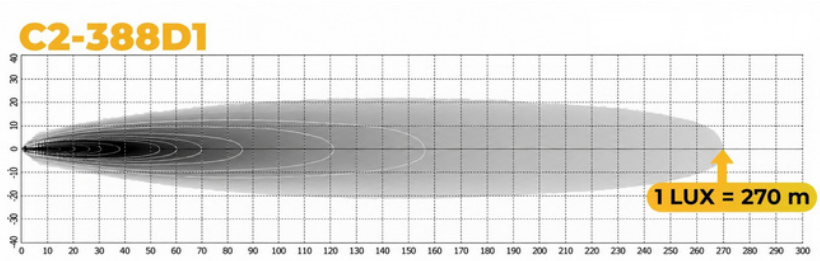

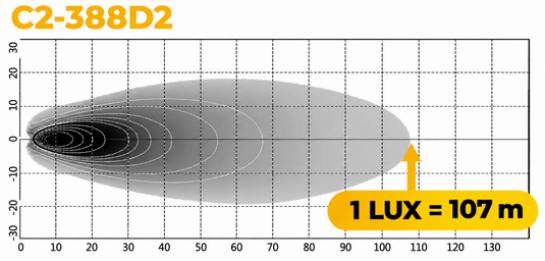

Lucid Electronics Limited is an appointed SCI sales agent
Unit 425 Bedford Heights, Manton Lane, Bedford, MK41 7PH | Company Number 10385887 | VAT 262 6152 16
UK Office: +44 (0)1234 380226 | France Office: +33 (0) 7 67 38 35 67 | Email info@lucidelectronics.com | web: www.lucidelectronics.com

C2-388D LED Work Light

10-33VDC | Wide Beam | 7350lm | 50W | IP68 / 69K

Specifications

Housing Shape	Oval	Beam Pattern	Flood/ Wide Flood
Raw Lumen Output	7350lm	Effective Lumen Output	4700lm
Colour Temperature	5700K	Voltage	10-33VDC
Nominal Current at	4.2A@12V ~ 2.1A@24V	Power Consumption	50W
IP Rating	IP68 / IP69K	Shock Resistance	10G
Operating Temp Range	-30°C...+65°C	Housing Material	Aluminium
Lens Material	Polycarbonate	Dimensions	158 x 97 x 144mm
Mounting Style	Vertical single bolt bracket	Termination	Deutsch DT04-2P connector or 300mm wire
EMC	ECE R10, ISO13766, CISPR25 class3	Approvals	-