C2-383 LED Safety Light

9-64VDC | Spot Beam | 140lm | 6W | IP67



The C2-383 is an oval-shaped blue safety lamp with two high-intensity LEDs in an aluminium housing, designed for forklifts and warehouse vehicles. Operating at 9-64VDC and consuming 6W, it has a colour temperature of 465-485nm and a lumen output of 140 lumens. It is IP67 rated, is vibration resistant up to 7G, and functions in temperatures from -30°C to +65°C. Compliant with EN50498, it features 300mm wire termination and electrical protections. The bright blue spotlight enhances operator awareness in busy environments, making it essential for warehouses, construction, and specialist vehicles.
Overheat, reverse polarity and over voltage protected

Designed for:

Materials Handling

9-64VDC **Wide Beam** **140lm** **6W** **IP67**

Dimensions (mm)

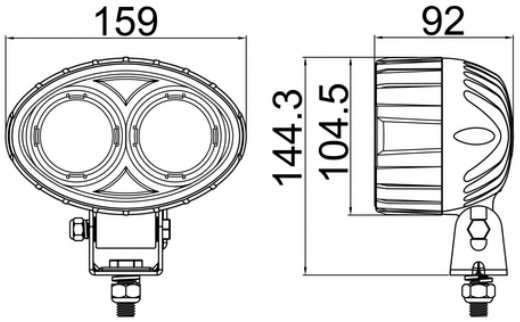

Beam Pattern

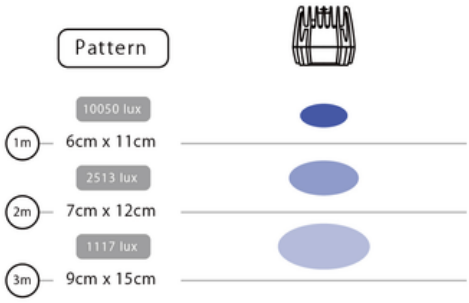

Specifications

Housing Shape	Oval	Beam Pattern	Spot
Raw Lumen Output	140lm	Effective Lumen Output	100lm
Colour Temperature	465-485nm	Voltage	9-64VDC
Nominal Current at	A@12V ~ A@24V	Power Consumption	6W
IP Rating	IP67	Shock Resistance	7G
Operating Temp Range	-30°C...+65°C	Housing Material	Aluminium
Lens Material	Polycarbonate	Dimensions	159 x 144.3 x 92mm
Mounting Style	Vertical single bolt bracket	Termination	300mm wire
EMC	EN50498	Approvals	-

Lucid Electronics Limited is an appointed SCI sales agent
Unit 425 Bedford Heights, Manton Lane, Bedford, MK41 7PH | Company Number 10385887 | VAT 262 6152 16
UK Office: +44 (0)1234 380226 | France Office: +33 (0) 7 67 38 35 67 | Email info@lucidelectronics.com | web: www.lucidelectronics.com