C2-3011 LED Work Light

9-33VDC | Wide Beam | 4200lm | 22W | IP68 / 69K



Designed for:

Off road & Specialist Vehicles

Agriculture & Construction

The C2-3011 is a heavy-duty LED light bar designed for off-road applications. It features an aluminium housing and a polycarbonate lens, with six 5W LEDs providing an effective 1500lm output of bright and uniform floodlight illumination. Operating within a voltage range of 9-33VDC, it ensures reliable lighting with low 22W energy usage. The light bar is designed to withstand harsh conditions, with an IP68/IP69K rating for protection against dust, water, and chemicals, and it offers excellent shock resistance. Approved under ECE R10 and ISO 13766, it meets international standards for electromagnetic compatibility. It has sturdy end brackets with four-screw mounting points to ensure extra stability. This light bar is ideal for use in off-road, specialist, agricultural, and construction vehicles. Overheat, reverse polarity and over voltage protected

9-33VDC **Wide Beam** **4200lm** **22W** **IP68 / 69K**

Dimensions (mm)

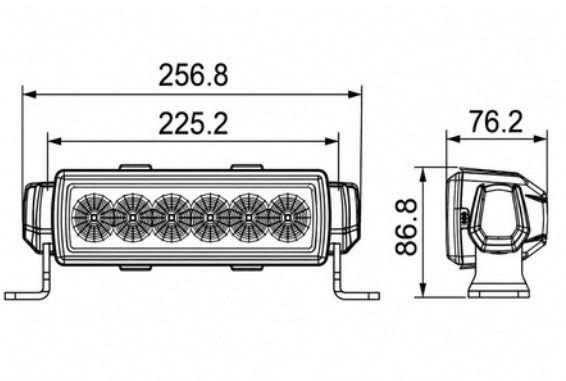

Beam Pattern 2.5m at 10°

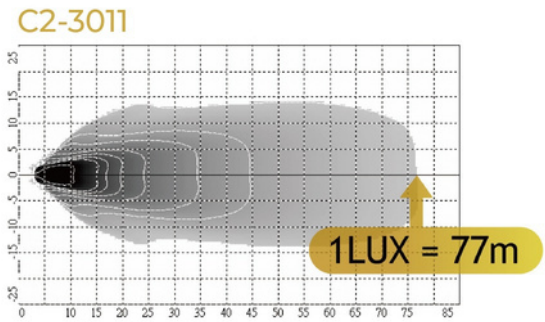

Specifications

Housing Shape	Light Bar	Beam Pattern	Flood
Raw Lumen Output	4200lm	Effective Lumen Output	1500lm
Colour Temperature	5700K	Voltage	9-33VDC
Nominal Current at	1.8A@12V ~ 0.92A@24V	Power Consumption	22W
IP Rating	IP68 / IP69K	Shock Resistance	10G
Operating Temp Range	-30°C...+65°C	Housing Material	Aluminium
Lens Material	Polycarbonate	Dimensions	256.8 x 86.8 x 76.2mm
Mounting Style	Double bracket 4 bolt mount	Termination	Deutsch DT04-2P connector
EMC	ISO13766, ECE R10	Approvals	-

Lucid Electronics Limited is an appointed SCI sales agent
Unit 425 Bedford Heights, Manton Lane, Bedford, MK41 7PH | Company Number 10385887 | VAT 262 6152 16
UK Office: +44 (0)1234 380226 | France Office: +33 (0) 7 67 38 35 67 | Email info@lucidelectronics.com | web: www.lucidelectronics.com