佳尼有限公司 CANAL COMPONENTS INC

SWITCH FUCNTION		
DPDT	(ON)-OFF-(ON)	TWO LAMP

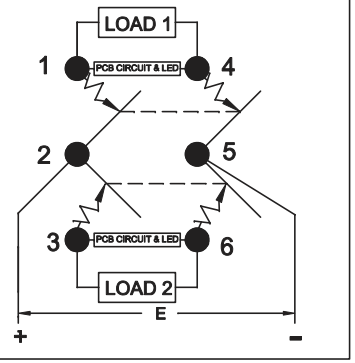

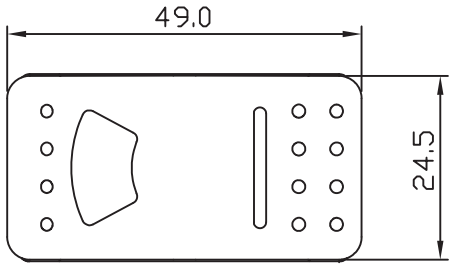

Specification :

Contact resistance: 20mΩ max. (initial)
Insulation resistance: 100MΩ min. (at 500V DC)
Dielectric strength: 1,500V AC 50/60 Hz for 1 minute
Service life: Mechanically: 100,000 operations min.
Electrically: 30,000 operations min.

Rating: 16A (6~30V d.c.) μT55 (cURus/ENEC15)

Circuit: (ON) - OFF - (ON) DPDT
Pos 1 Red LED
Pos 3 Amber LED

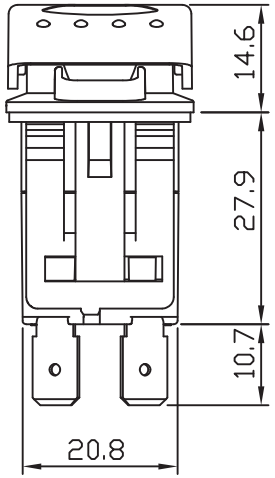

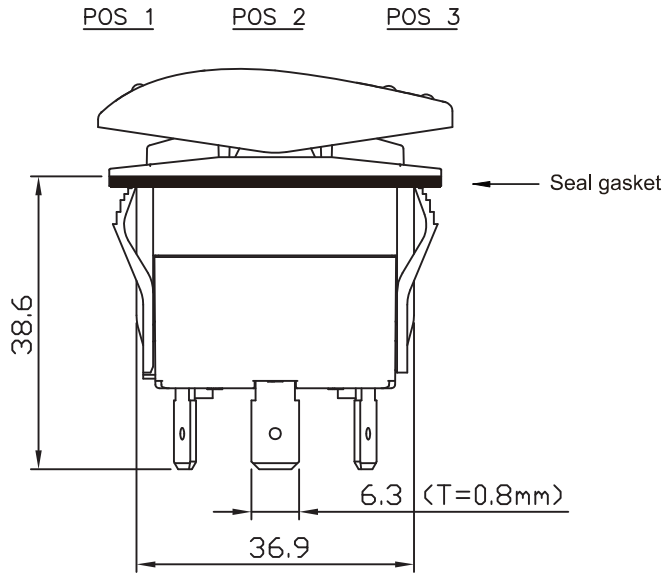



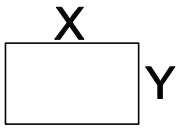

	X	Y
1.0~ 1.5	$37.3^{+0.0}_{-0.1}$	$21.2^{+0.1}_{-0.0}$
2.5 ~3.0	$37.5^{+0.0}_{-0.1}$	$21.2^{+0.1}_{-0.0}$
3.5 ~4.5	$37.7^{+0.0}_{-0.1}$	$21.2^{+0.1}_{-0.0}$

Panel Cut-out (assembled togrther with seal gasket)

NOTE: TOLERANCES UNLESS OTHERWISE SPECIFIED : ± $^{.012}_{0.3}$ (mm).

REVISION	DESCRIPION	REVISED BY	TOLEANCES .X .XX ANGLE ½°				UNIT	mm	PART NAME	SPEC DRAWING	DWG NO
4			DRAWN BY	張俊雄	DESIGNED BY	王豐文	SCALE				WS3082A
3											
2			CHECKED BY	Jimmy	APPROVED BY		DATE	2016.05.31	PART NO	X5-264ENN-1ABD-2HN	
1 2016.05.31	首次出圖	張俊雄									