ZIPPY TECHNOLOGY CORP.

10F, NO.50, MIN CHYUAN ROAD,
SHIN-TIEN CITY, TAIPEI COUNTY,
TAIWAN, R.O.C

TEL: 886-2-2918-8512 / 886-2-2918-0603
FAX: 886-2-2915-5765 / 886-22916-0215
Http://www.zippy.com.tw

# APPROVED DATA SHEET

## Model: 1001120066(SM1-16H-00P0-Z)

ISSUED DATE: 2023.11.17
APPROVED NO.: 1001120066.E


The undersigned guarantee of the model switches is meets the following specifications.

## 1.Operation Characteristics

| | | |
|---|---|---|
| Operating Force (OF) | : | Max. 355 gf |
| Releasing Force (RF) | : | Min. 100 gf |
| Free Position ( FP ) | : | Max. 12.2 mm |
| Operating Position (OP) | : | 11.4±0.3 mm |
| Movement Differential (MD) | : | Max.0.2 mm |
| Over-travel (OT) | : | Min. 0.4 mm |
| Pre-travel (PT) | : | Max.1.1 mm |

## 2. Specifications

| | | |
|---|---|---|
| Initial Contact Resistance | : | Max. 300 mΩ .<br>( Measured by ohm meter –Open Voltage<1VDC, Driver current -100mA )<br>Before measure the switch contact resistance, please press the switch three times on and off. |
| Initial Dielectric Strength | : | 1,000VAC(50-60HZ)/minute between contacts.<br>1,500VAC(50-60HZ)/minute between Live-parts and dead metal parts. |
| Insulation Resistance | : | Min. 100 MΩ (500 VDC/ minute) between Live-parts and dead metal parts. |
| Circuit Arrangement | : | SPDT (Single pole double throw) |
| Rating | : | 16A 125/250VAC; 6(3)A 125/250VAC |
| Service Life | : | Min. 10,000 operations. |
| Rating Load | : | Resistive and Motor Load. |
| Operating Frequency | : | 10~30 operations per minute. |
| Safety Certificate | : | UL, cUL, ENEC |

ZIPPY TECHNOLOGY CORP.

10F, NO.50, MIN CHYUAN ROAD,
SHIN-TIEN CITY, TAIPEI COUNTY,
TAIWAN, R.O.C

TEL: 886-2-2918-8512 / 886-2-2918-0603
FAX: 886-2-2915-5765 / 886-22916-0215
Http://www.zippy.com.tw

# APPROVED DATA SHEET

## Model: 1001120066(SM1-16H-00P0-Z)

ISSUED DATE: 2023.11.17
APPROVED NO.: 1001120066.E


## 3. Environments

| | | |
|---|---|---|
| Operating Temperature | : | -40℃ ~ 125℃ (with no icing) |
| Vibration Resistance | : | 10~55Hz, displacement 0.75mm(p-p) |
| Shock Resistance | : | Destruction: 1,000 m/s$^2$ {approx. 100G} max.<br>Malfunction: 300 m/s$^2$ {approx. 30G} max. |

( For the pin plunger models, the vibration & shock condition apply for use at the free position and total travel position )
( For the lever models, the vibration & shock condition apply for use at the total travel position )

| | | |
|---|---|---|
| Soldering by hand | : | 350℃ maximum within 5 seconds. |
| Soldering bath | : | 260℃ maximum within 5 seconds. |

## 4. Caution:

Micro Switch Cautions

or click the link→ https://www.zippy.com/ecmodelcautions/micro_switch_cautions.pdf

ZIPPY TECHNOLOGY CORP.
卓妍蓁
---
PREPARED
簡永鎮
---
CHECKED
沈俊榮
---
APPROVED

# Dimensions drawing

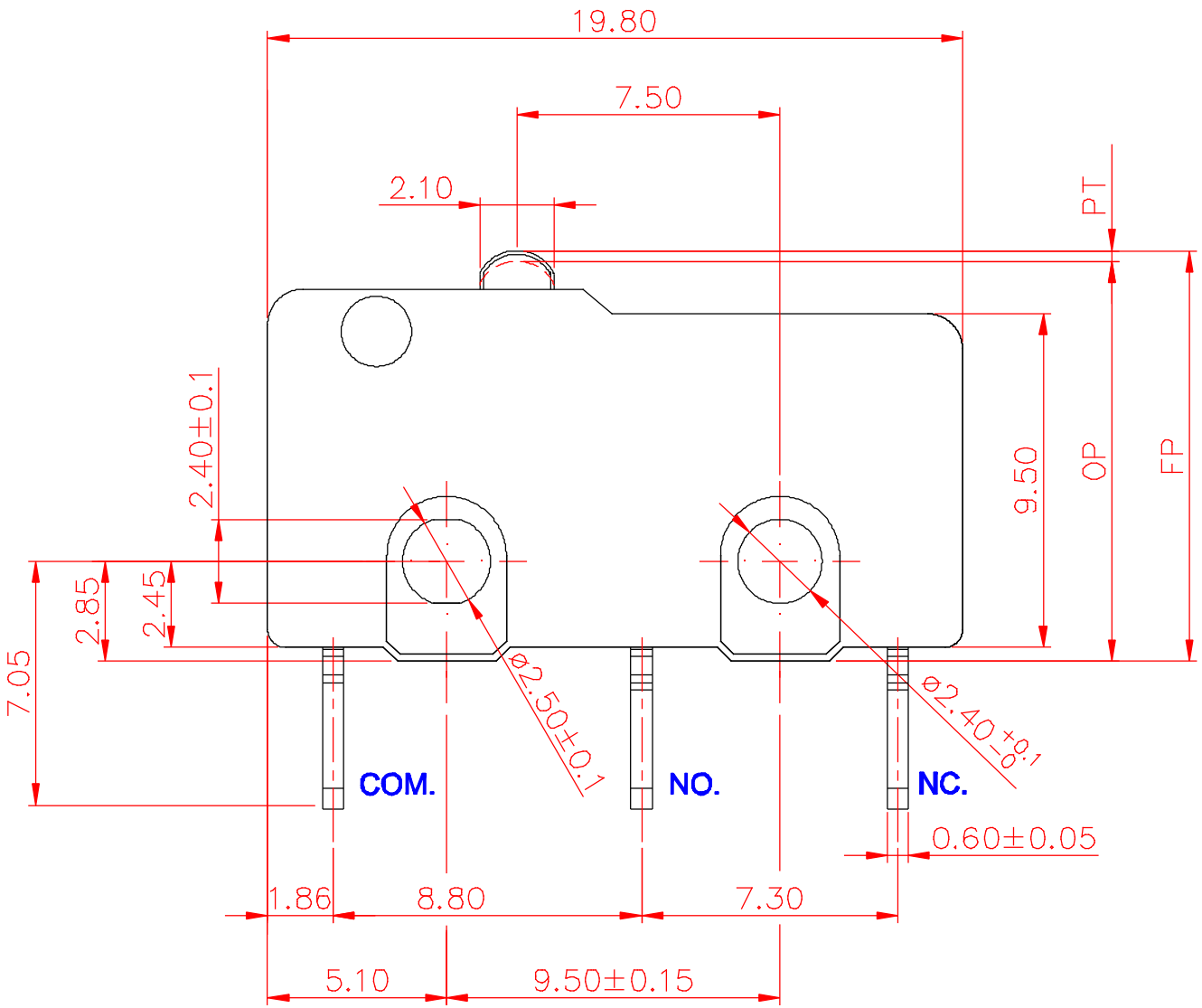


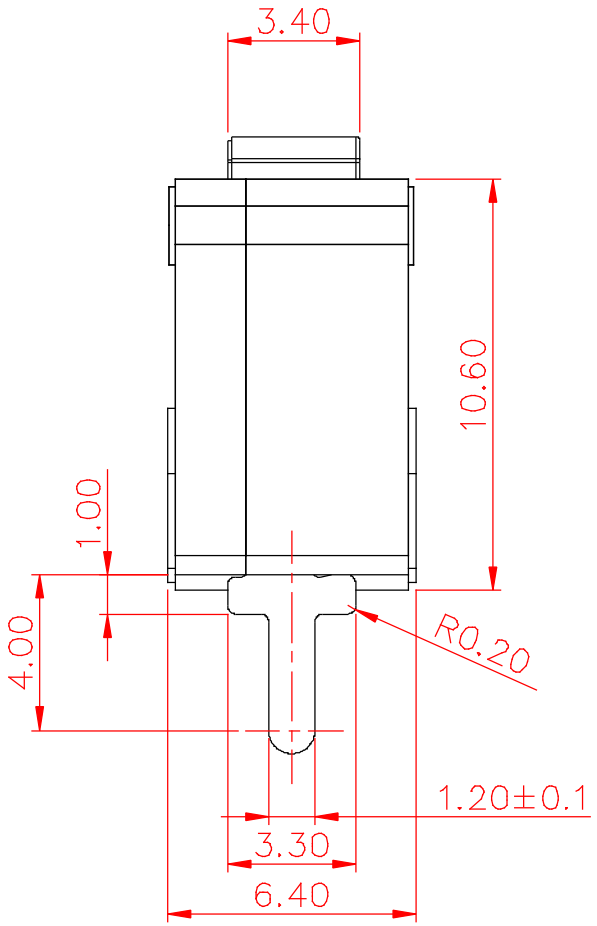


| Tolerance | |
|---|---|
| X.X | ±0.2 |
| XX.X | ±0.4 |

| | | | | | |
|---|---|---|---|---|---|
| VIEW | | SIZE | A4 | UNIT | mm |
| DATE | JAN.15.2015 | VER. | 1.5 | FILE NAME | SM1-00P0 |
| APPROVAL | 倪有庭 | CONFIRM | 王永輝 | DESIGN | 林佩貞 |

新巨企業股份有限公司 ZIPPY TECHNOLOGY CORP.

# Marking drawing

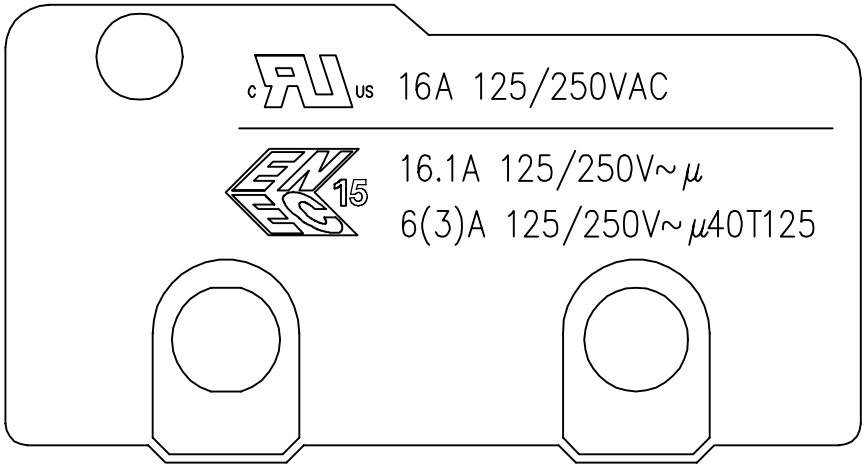


COVER

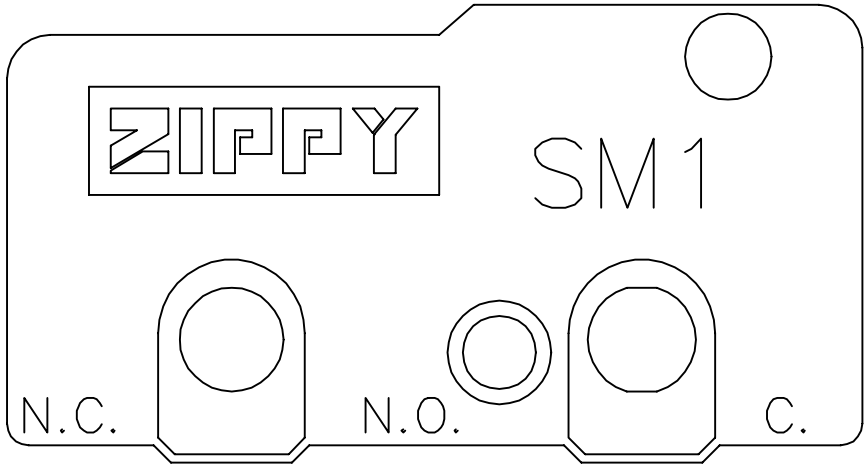


CASE

This page shows switch marking only.
此頁僅顯示開關印字，外觀參照外觀圖
Marking can either be printed or molded
印字可為印刷或模刻

| | | | | | |
|---|---|---|---|---|---|
| VIEW | | SIZE | A4 | UNIT | mm |
| DATE | 2020.11.06 | VER. | 1.5 | FILE NAME | SM1-16 |
| APPROVAL | 沈俊榮 | CONFIRM | 張立人 | DESIGN | 張奕銨 |

新巨企業股份有限公司

ZIPPY TECHNOLOGY CORP.