ZIPPY TECHNOLOGY CORP.

10F, NO.50, MIN CHYUAN ROAD,
SHIN-TIEN CITY, TAIPEI COUNTY,
TAIWAN, R.O.C

TEL: 886-2-2918-8512 / 886-2-2918-0603
FAX: 886-2-2915-5765 / 886-22916-0215
Http://www.zippy.com.tw

APPROVED DATA SHEET

Model: 1001240499(VW1-10S1-05D3-Z)

ISSUED DATE: 2024.03.01

APPROVED NO.: 1001240499.B

The undersigned guarantee of the model switches is meets the following specifications.

1.Operation Characteristics

Operating Force (OF)	:	Max. 200 gf
Releasing Force (RF)	:	Min. 30 gf
Operating Position (OP)	:	20.6±0.5 mm
Movement Differential (MD)	:	Max. 0.5 mm
Over-travel (OT)	:	Min. 1.0 mm
Pre-travel (PT)	:	Max. 2.1 mm

2. Specifications

Initial Contact Resistance	:	Max. 300 mΩ . (Initial) (For molded lead wire models) (Measured by ohm meter –Open Voltage<1VDC, Driver current -100mA) Before measure the switch contact resistance, please press the switch three times on and off.
Initial Dielectric Strength	:	500VAC(50-60HZ)/minute between contacts. 1,500VAC(50-60HZ)/minute between Live-parts and dead metal parts.
Insulation Resistance	:	Min. 100 MΩ (500 VDC/ minute).
Circuit Arrangement	:	SPDT (Single pole double throw)
Rating	:	10A 125/250VAC; 5A 30VDC
Service Life	:	Min. 10,000 operations.
Operating Frequency	:	10 ~ 30 operations per minute.
Safety Certificate	:	UL, cUL, ENEC
Mechanical Service Life	:	Min. 1,000,000 operations.
Operating Frequency	:	Max. 120 operations per minute.

Operating application of the switch : Set the switch pushing distance from 60% to 90% of the specified OT value.

ZIPPY TECHNOLOGY CORP.

10F, NO.50, MIN CHYUAN ROAD,
SHIN-TIEN CITY, TAIPEI COUNTY,
TAIWAN, R.O.C

TEL: 886-2-2918-8512 / 886-2-2918-0603
FAX: 886-2-2915-5765 / 886-22916-0215
Http://www.zippy.com.tw

APPROVED DATA SHEET

Model: 1001240499(VW1-10S1-05D3-Z)

ISSUED DATE: 2024.03.01
APPROVED NO.: 1001240499.B

3. Environments

Operating Temperature	:	-40℃ ~ 85℃ (with no icing)
Vibration Resistance	:	10~55Hz, displacement 0.75mm(p-p)
Shock Resistance	:	Destruction: 1,000 m/s^2 {approx. 100G} max. Malfunction: 300 m/s^2 {approx. 30G} max.

(For the pin plunger models, the vibration & shock condition apply for use at the free position and total travel position)

(For the lever models, the vibration & shock condition apply for use at the total travel position)

Soldering by hand	:	350℃ maximum within 5 seconds.

4. Caution:

Micro Switch Cautions

or click the link→ https://www.zippy.com/ecmodelcautions/micro_switch_cautions.pdf

ZIPPY TECHNOLOGY CORP.
黃玉燕

PREPARED
許志誠

CHECKED
沈俊榮

APPROVED

Dimensions drawing

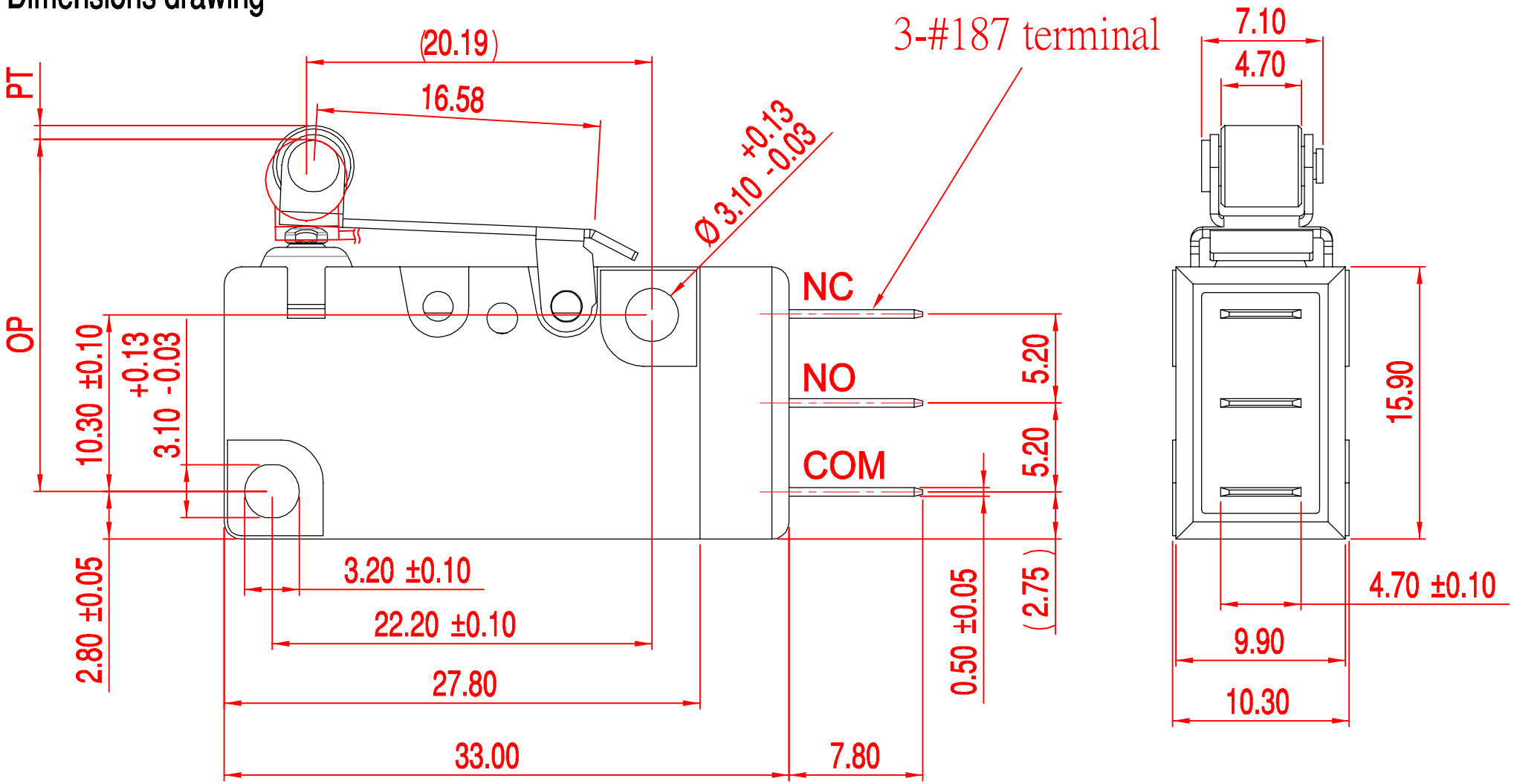

Tolerance	
X.X	± 0.2
XX.X	± 0.4

VIEW		SIZE	A4	UNIT	mm
DATE	NOV-07-2013	VER.	1.1	FILE NAME	VW1-05D3-R
APPROVAL	方鼎杰	CONFIRM	林格祥	DESIGN	沈俊榮

新巨企業股份有限公司 ZIPPY TECHNOLOGY CORP.

Marking drawing

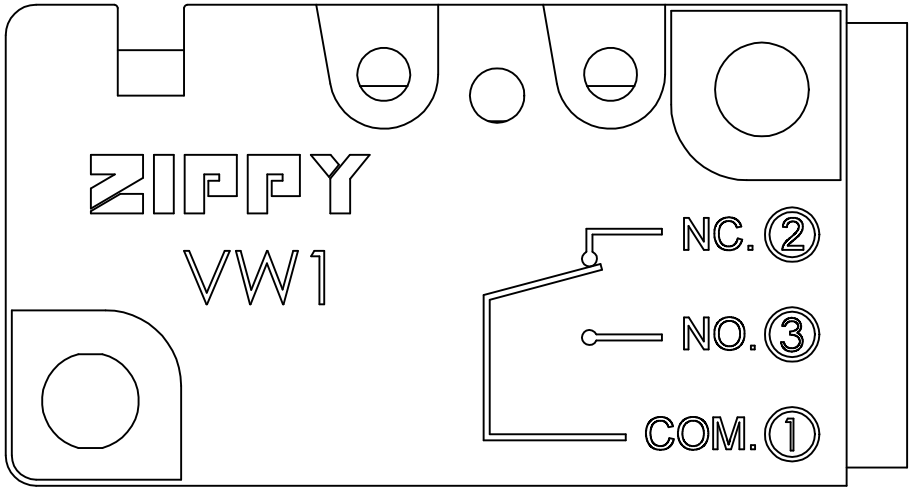

obverse side

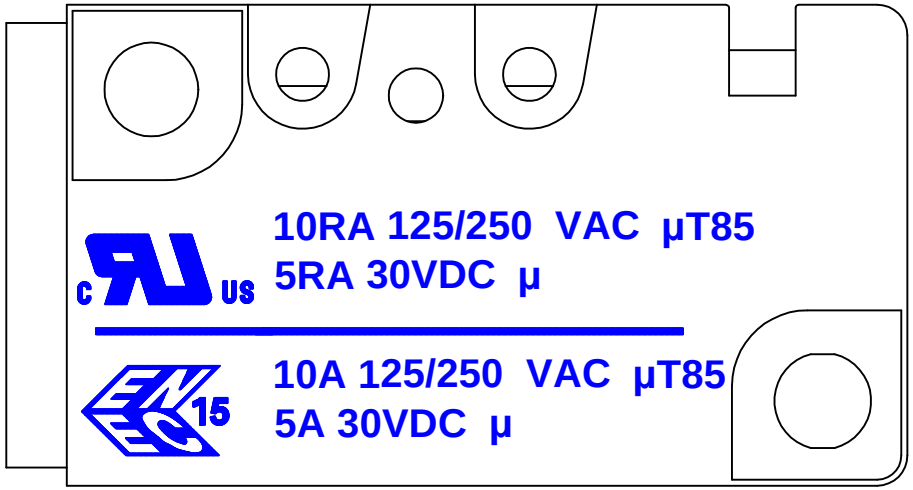

reverse side

This page shows switch marking only.
此頁僅顯示開關印字，外觀參照外觀圖
Marking can either be printed or molded
印字可為印刷或模刻

新巨企業股份有限公司	ZIPPY TECHNOLOGY CORP.	VIEW		SIZE	A4	UNIT	mm
		DATE	2020.11.05	VER.	1.1	FILE NAME	VW1-10-uT85
		APPROVAL	沈 俊 榮	CONFIRM	張 奕 銨	DESIGN	許 志 誠