ZIPPY TECHNOLOGY CORP.

10F, NO.50, MIN CHYUAN ROAD,
SHIN-TIEN CITY, TAIPEI COUNTY,
TAIWAN, R.O.C

TEL: 886-2-2918-8512 / 886-2-2918-0603
FAX: 886-2-2915-5765 / 886-22916-0215
Http://www.zippy.com.tw

# APPROVED DATA SHEET

## Model: 1001240242(VW1-10S1-03D3-Z)

ISSUED DATE: 2024.02.20

APPROVED NO.: 1001240242.D



The undersigned guarantee of the model switches is meets the following specifications.

## 1.Operation Characteristics

| | | |
|---|---|---|
| Operating Force (OF) | : | Max. 70 gf |
| Releasing Force (RF) | : | Min. 6 gf |
| Operating Position (OP) | : | 13.4±2.0 mm |
| Movement Differential (MD) | : | Max. 2 mm |
| Pre-travel (PT) | : | Max. 7 mm |

## 2. Specifications

| | | |
|---|---|---|
| Initial Contact Resistance | : | Max. 300 mΩ . (Initial) (For molded lead wire models)<br>( Measured by ohm meter –Open Voltage<1VDC, Driver current -100mA )<br>Before measure the switch contact resistance, please press the switch three times on and off. |
| Initial Dielectric Strength | : | 500VAC(50-60HZ)/minute between contacts.<br>1,500VAC(50-60HZ)/minute between Live-parts and dead metal parts. |
| Insulation Resistance | : | Min. 100 MΩ ( 500 VDC/ minute ). |
| Circuit Arrangement | : | SPDT ( Single pole double throw ) |
| Rating | : | 10A 125/250VAC; 5A 30VDC |
| Service Life | : | Min. 10,000 operations. |
| Operating Frequency | : | 10 ~ 30 operations per minute. |
| Safety Certificate | : | UL, cUL, ENEC |
| Mechanical Service Life | : | Min. 1,000,000 operations. |
| Operating Frequency | : | Max. 120 operations per minute. |

Operating application of the switch : Set the switch pushing distance from 60% to 90% of the specified OT value.

ZIPPY TECHNOLOGY CORP.

10F, NO.50, MIN CHYUAN ROAD,
SHIN-TIEN CITY, TAIPEI COUNTY,
TAIWAN, R.O.C

TEL: 886-2-2918-8512 / 886-2-2918-0603
FAX: 886-2-2915-5765 / 886-22916-0215
Http://www.zippy.com.tw

# APPROVED DATA SHEET

## Model: 1001240242(VW1-10S1-03D3-Z)

ISSUED DATE: 2024.02.20
APPROVED NO.: 1001240242.D


## 3. Environments

| | | |
|---|---|---|
| Operating Temperature | : | -40℃ ~ 85℃ ( with no icing ) |
| Vibration Resistance | : | 10~55Hz, displacement 0.75mm(p-p) |
| Shock Resistance | : | Destruction: 1,000 m/s$^2$ {approx. 100G} max.<br>Malfunction: 300 m/s$^2$ {approx. 30G} max. |

( For the pin plunger models, the vibration & shock condition apply for use at the free position and total travel position )

( For the lever models, the vibration & shock condition apply for use at the total travel position )

Soldering by hand : 350℃ maximum within 5 seconds.

## 4. Caution:

Micro Switch Cautions

or click the link→ https://www.zippy.com/ecmodelcautions/micro_switch_cautions.pdf

ZIPPY TECHNOLOGY CORP.
PREPARED
黃玉燕
---
許志誠
---
CHECKED
沈俊榮
---
APPROVED

# Dimensions drawing

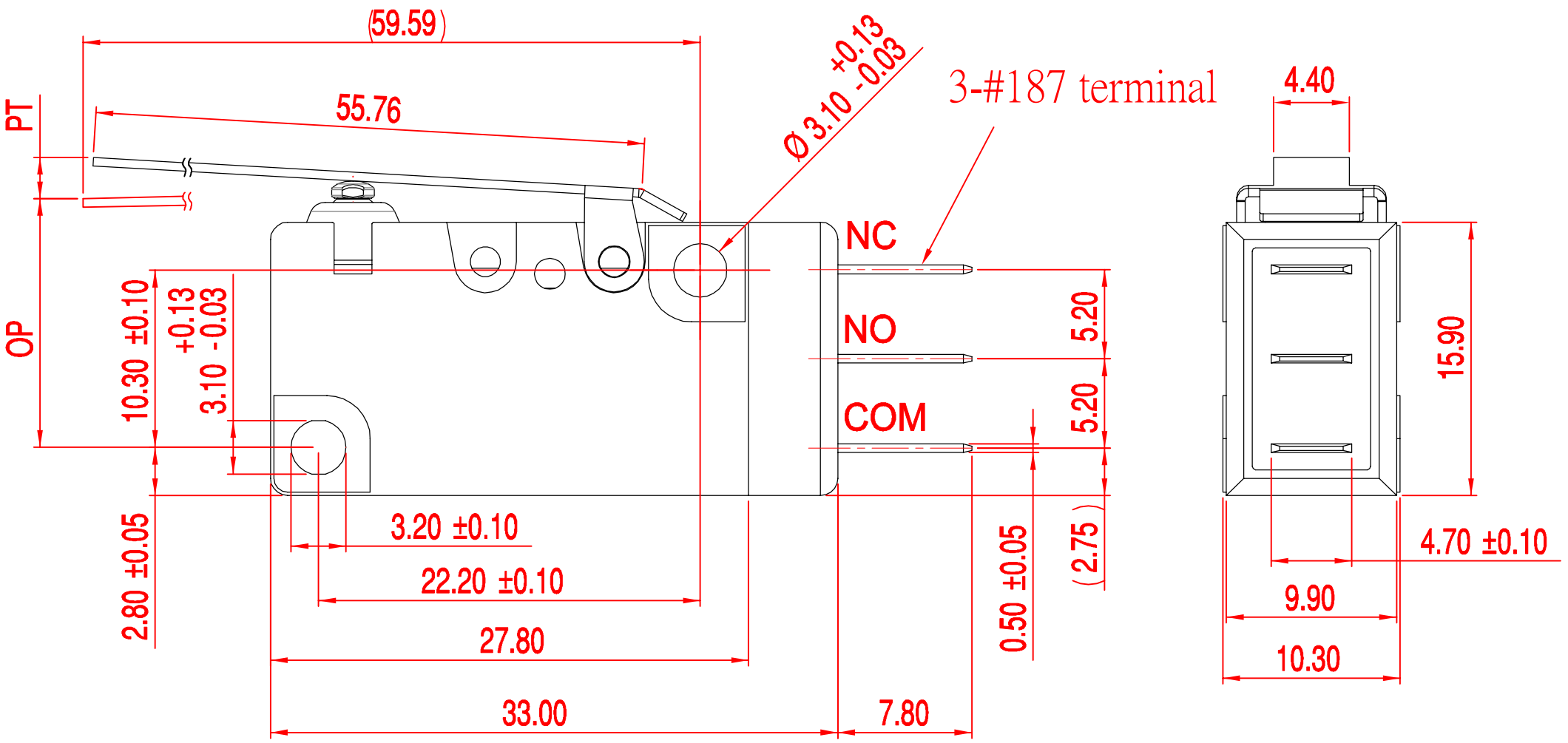


| Tolerance | |
|---|---|
| X.X | ± 0.2 |
| XX.X | ± 0.4 |

| | | | | | |
|---|---|---|---|---|---|
| VIEW | | SIZE | A4 | UNIT | mm |
| DATE | NOV-07-2013 | VER. | 1.1 | FILE NAME | VW1-03D3-R |
| APPROVAL | 方鼎杰 | CONFIRM | 林格祥 | DESIGN | 沈俊榮 |

新巨企業股份有限公司

ZIPPY TECHNOLOGY CORP.

Marking drawing

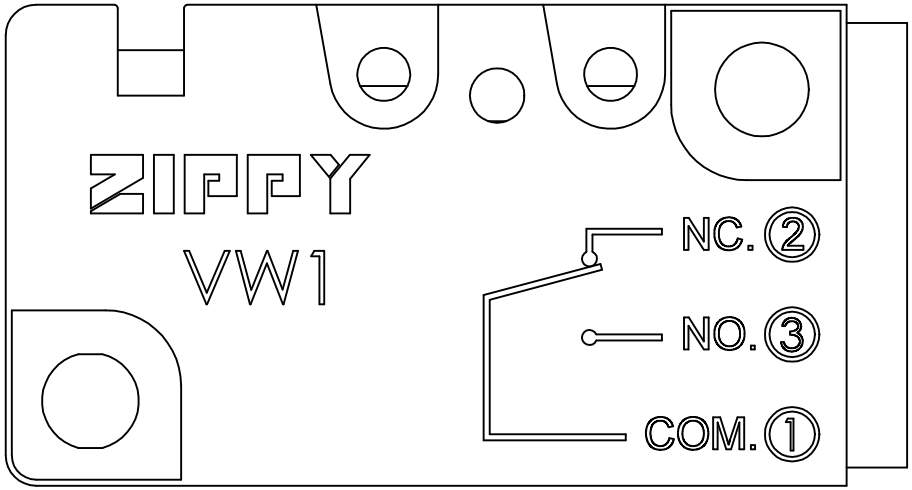


obverse side

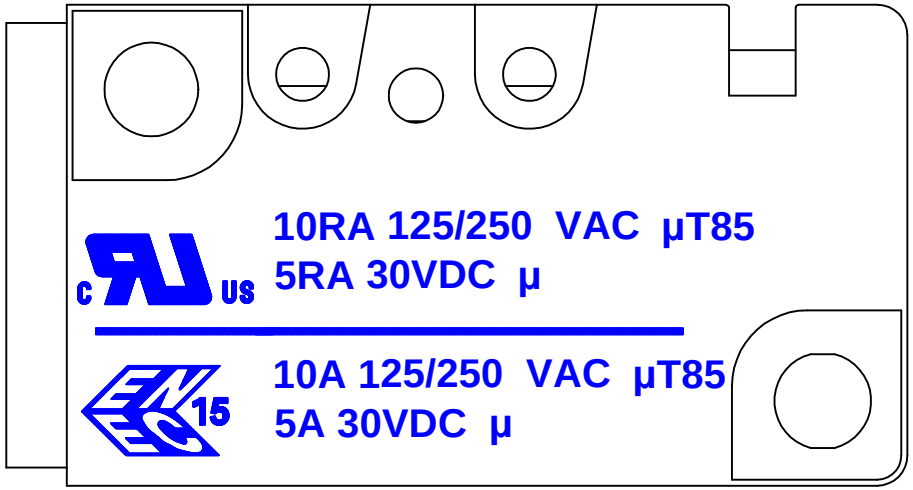


reverse side

This page shows switch marking only.
此頁僅顯示開關印字，外觀參照外觀圖
Marking can either be printed or molded
印字可為印刷或模刻

| | | | | | |
|---|---|---|---|---|---|
| 新巨企業股份有限公司 | ZIPPY TECHNOLOGY CORP. | VIEW | | SIZE | A4 | UNIT | mm |
| | | DATE | 2020.11.05 | VER. | 1.1 | FILE NAME | VW1-10-uT85 |
| | | APPROVAL | 沈 俊 榮 | CONFIRM | 張 奕 銨 | DESIGN | 許 志 誠 |