ZIPPY TECHNOLOGY CORP.

10F, NO.50, MIN CHYUAN ROAD,
SHIN-TIEN CITY, TAIPEI COUNTY,
TAIWAN, R.O.C

TEL: 886-2-2918-8512 / 886-2-2918-0603
FAX: 886-2-2915-5765 / 886-22916-0215
Http://www.zippy.com.tw

APPROVED DATA SHEET

Model: 1001230177(VA1-26Q1-05E0-Z)

ISSUED DATE: 2020.12.01
APPROVED NO.: 1001230177.D

The undersigned guarantee of the model switches is meets the following specifications.

1.Operation Characteristics

Operating Force (OF)	:	Max.375 gf
Releasing Force (RF)	:	Min.50 gf
Operating Position (OP)	:	20.7±0.6 mm
Movement Differential (MD)	:	Max.0.45 mm
Over-travel (OT)	:	Min.1.1 mm
Pre-travel (PT)	:	Max.2.7 mm

2. Specifications

Initial Contact Resistance	:	Max. 300 mΩ . (Measured by ohm meter –Open Voltage<1VDC, Driver current -100mA) Before measure the switch contact resistance, please press the switch three times on and off.
Dielectric Strength	:	500VAC(50-60HZ)/minute between contacts. 1,500VAC(50-60HZ)/minute between Live-parts and dead metal parts.
Insulation Resistance	:	Min. 100 MΩ (500 VDC/ minute) between Live-parts and dead metal parts.
Circuit Arrangement	:	SPDT (Single pole double throw)
Rating	:	26A 125/250VAC
Service Life	:	Min. 10,000 operations.
Rating Load	:	Resistive Load and Motor Load.
Operating Frequency	:	10~30 operations per minute.
Safety Certificate	:	ENEC
Mechanical Service Life	:	Min. 10,000,000 operations.
Operating Frequency	:	Max. 120 operations per minute.

Operating application of the switch : Set the switch pushing distance from 60% to 90% of the specified OT value.

ZIPPY TECHNOLOGY CORP.

10F, NO.50, MIN CHYUAN ROAD,
SHIN-TIEN CITY, TAIPEI COUNTY,
TAIWAN, R.O.C

TEL: 886-2-2918-8512 / 886-2-2918-0603
FAX: 886-2-2915-5765 / 886-22916-0215
Http://www.zippy.com.tw

APPROVED DATA SHEET

Model: 1001230177(VA1-26Q1-05E0-Z)

3. Environments

Operating Temperature	:	-40℃ ~ 85℃ (with no icing)
Vibration Resistance	:	10~55Hz, displacement 0.75mm(p-p)
Shock Resistance	:	Destruction: 1,000 m/s^2 {approx. 100G} max. Malfunction: 300 m/s^2 {approx. 30G} max.

(For the pin plunger models, the vibration & shock condition apply for use at the free position and total travel position)

(For the lever models, the vibration & shock condition apply for use at the total travel position)

Soldering by hand	:	350 ℃ maximum within 5 seconds.

ZIPPY TECHNOLOGY CORP.
簡素玲

PREPARED
陳立業

CHECKED
沈俊榮

APPROVED

Dimensions drawing

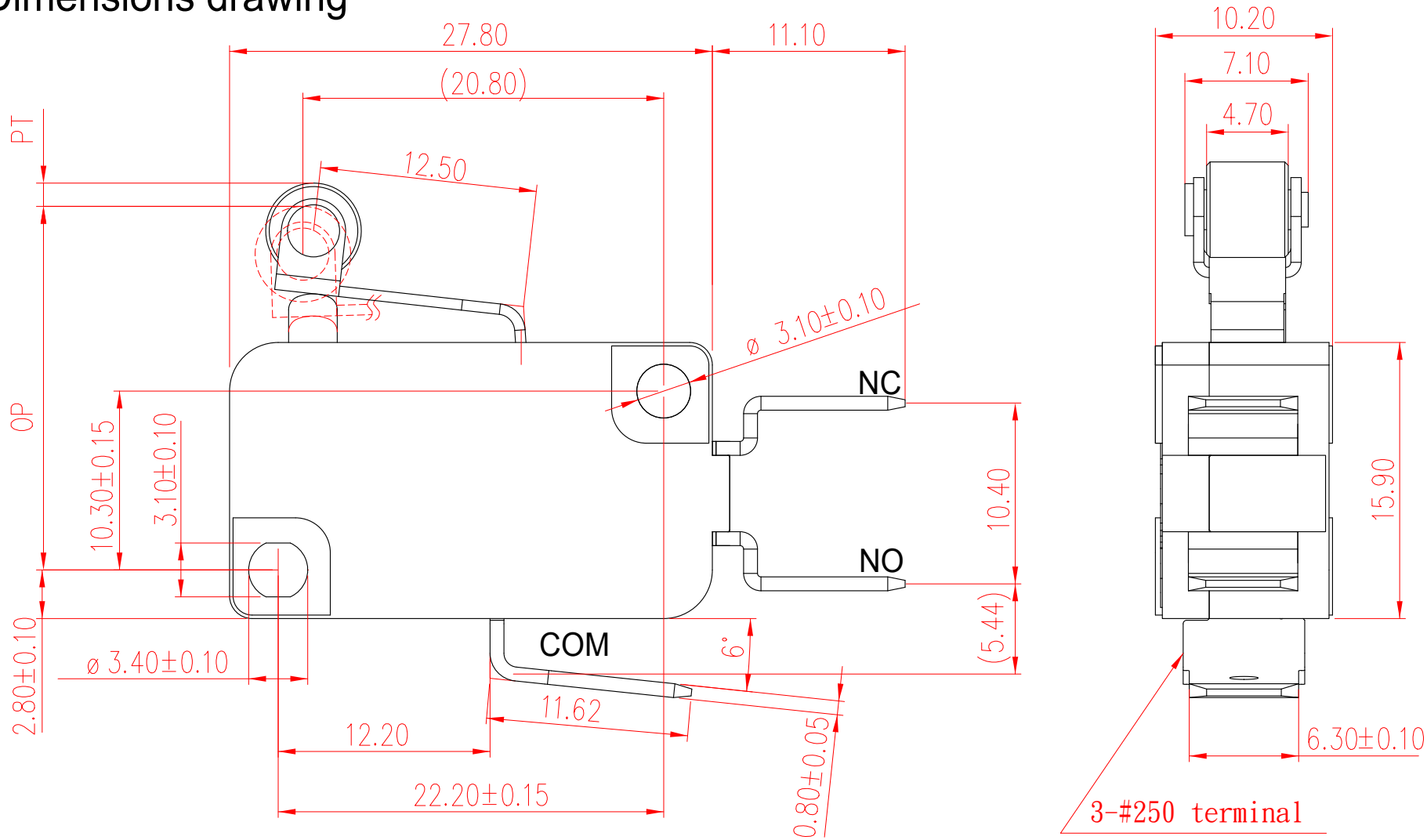

Tolerance	
X.X	±0.2
XX.X	±0.4

VIEW		SIZE	A4	UNIT	mm
DATE	MAR.25.2015	VER.	1.2	FILE NAME	VA1-05E0-R
APPROVAL	沈俊榮	CONFIRM	張立人	DESIGN	陳立業

新巨企業股份有限公司 ZIPPY TECHNOLOGY CORP.

Marking drawing

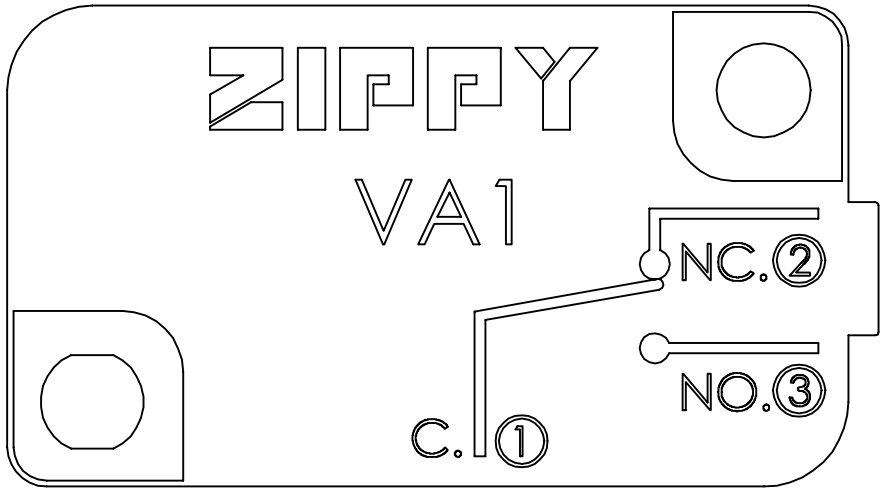

COVER

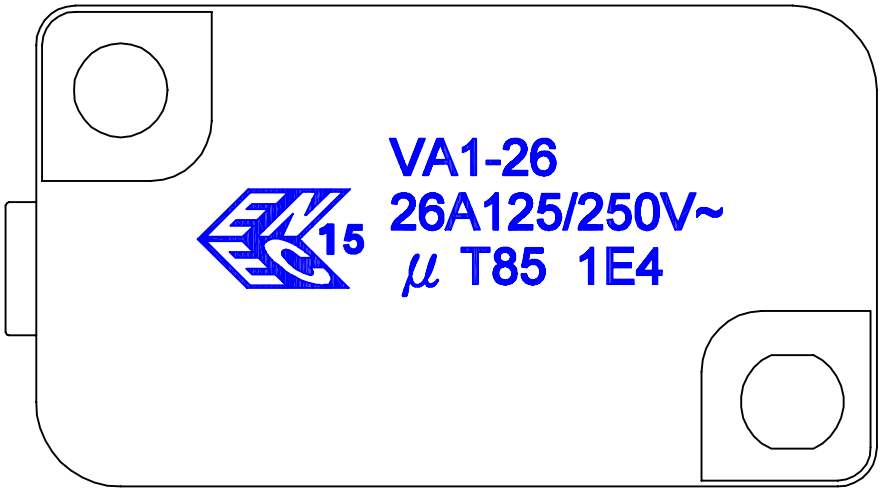

CASE

This page shows switch marking only.
此頁僅顯示開關印字，外觀參照外觀圖
Marking can either be printed or molded
印字可為印刷或模刻

VIEW		SIZE	A4	UNIT	mm
DATE	2020.11.17	VER.	1.0	FILE NAME	VA1-26
APPROVAL	沈俊榮	CONFIRM	許志誠	DESIGN	陳立業

新巨企業股份有限公司 ZIPPY TECHNOLOGY CORP.

CAUTIONS:

注意事項

1:To secure the switch, please use an M3 small screw on a flat surface and tighten with plane washers or spring washers to securely mount the Switch, using a maximum torque of 0.59N·m.

若使用定位孔型式，請使用M3小型螺絲固定在平面上，並使用平墊圈或者彈性墊圈以便安全的鎖固開關，鎖固扭力請勿超過0.59 N·m.

2: To ensure the best performance of the switch, when handling/installing the switch, please do not apply uneven pressure to the direction indicated by the arrow in (Figure -1). Any uneven pressure or pressure direction other than the operating direction might be harmful or damage the switch performance.

為確保開關正常運作，安裝及取用開關時，請勿直接施加壓力在(圖-1)中箭頭所指示的方向。如圖所示，任何不對稱的壓力或作動方向以外的壓力都不適用在開關按柄上。

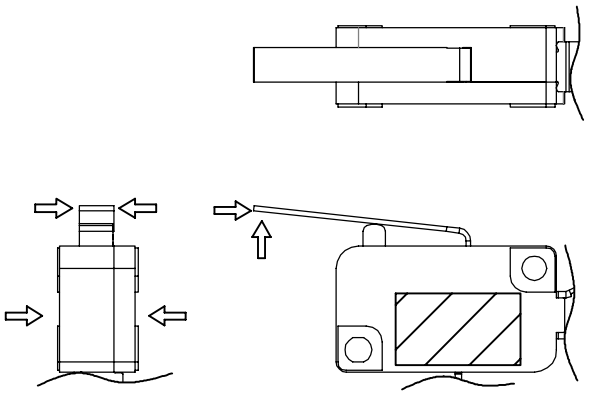

Figure-1

新巨企業股份有限公司	ZIPPY TECHNOLOGY CORP.	VIEW		SIZE	A4	UNIT	mm
		DATE	2019.12.17	VER.	1.0	FILE NAME	VA1－CAUTIONS
		APPROVAL	沈俊榮	CONFIRM	許志誠	DESIGN	陳立業