ZIPPY TECHNOLOGY CORP.

10F, NO.50, MIN CHYUAN ROAD,
SHIN-TIEN CITY, TAIPEI COUNTY,
TAIWAN, R.O.C

TEL: 886-2-2918-8512 / 886-2-2918-0603
FAX: 886-2-2915-5765 / 886-22916-0215
Http://www.zippy.com.tw

# APPROVED DATA SHEET

## Model: 1001230463(VA1-26Q1-03E0-Z)

ISSUED DATE: 2022.10.13
APPROVED NO.: 1001230463.A


The undersigned guarantee of the model switches is meets the following specifications.

## 1.Operation Characteristics

| | | |
|---|---|---|
| Operating Force (OF) | : | Max. 65 gf |
| Releasing Force (RF) | : | Min. 7 gf |
| Operating Position (OP) | : | 15.3±2.4 mm |
| Movement Differential (MD) | : | Max. 2.1 mm |
| Pre-travel (PT) | : | Max. 9.3 mm |

## 2. Specifications

| | | |
|---|---|---|
| Initial Contact Resistance | : | Max. 300 mΩ.<br>( Measured by ohm meter –Open Voltage<1VDC, Driver current -100mA )<br>Before measure the switch contact resistance, please press the switch three times on and off. |
| Dielectric Strength | : | 500VAC(50-60HZ)/minute between contacts.<br>1,500VAC(50-60HZ)/minute between Live-parts and dead metal parts. |
| Insulation Resistance | : | Min. 100 MΩ( 500 VDC/ minute ) between Live-parts and dead metal parts. |
| Circuit Arrangement | : | SPDT ( Single pole double throw ) |
| Rating | : | 26A 125/250VAC |
| Service Life | : | Min. 10,000 operations. |
| Rating Load | : | Resistive Load and Motor Load. |
| Operating Frequency | : | 10~30 operations per minute. |
| Safety Certificate | : | ENEC |
| Mechanical Service Life | : | Min. 10,000,000 operations. |
| Operating Frequency | : | Max. 120 operations per minute. |

Operating application of the switch : Set the switch pushing distance from 60% to 90% of the specified OT value.

ZIPPY TECHNOLOGY CORP.

10F, NO.50, MIN CHYUAN ROAD,
SHIN-TIEN CITY, TAIPEI COUNTY,
TAIWAN, R.O.C

TEL: 886-2-2918-8512 / 886-2-2918-0603
FAX: 886-2-2915-5765 / 886-22916-0215
Http://www.zippy.com.tw

**APPROVED DATA SHEET**

---

**Model: 1001230463(VA1-26Q1-03E0-Z)**

==========

ISSUED DATE: 2022.10.13
APPROVED NO.: 1001230463.A


## 3. Environments

| | | |
|---|---|---|
| Operating Temperature | : | -40℃ ~ 85℃ ( with no icing ) |
| Vibration Resistance | : | 10~55Hz, displacement 0.75mm(p-p) |
| Shock Resistance | : | Destruction: 1,000 m/s$^2$ {approx. 100G} max.<br>Malfunction: 300 m/s$^2$ {approx. 30G} max. |

( For the pin plunger models, the vibration & shock condition apply for use at the free position and total travel position )

( For the lever models, the vibration & shock condition apply for use at the total travel position )

Soldering by hand : 350 ℃ maximum within 5 seconds.

ZIPPY TECHNOLOGY CORP.
黃玉燕
---
PREPARED
陳立業
---
CHECKED
沈俊榮
---
APPROVED

# Dimensions drawing

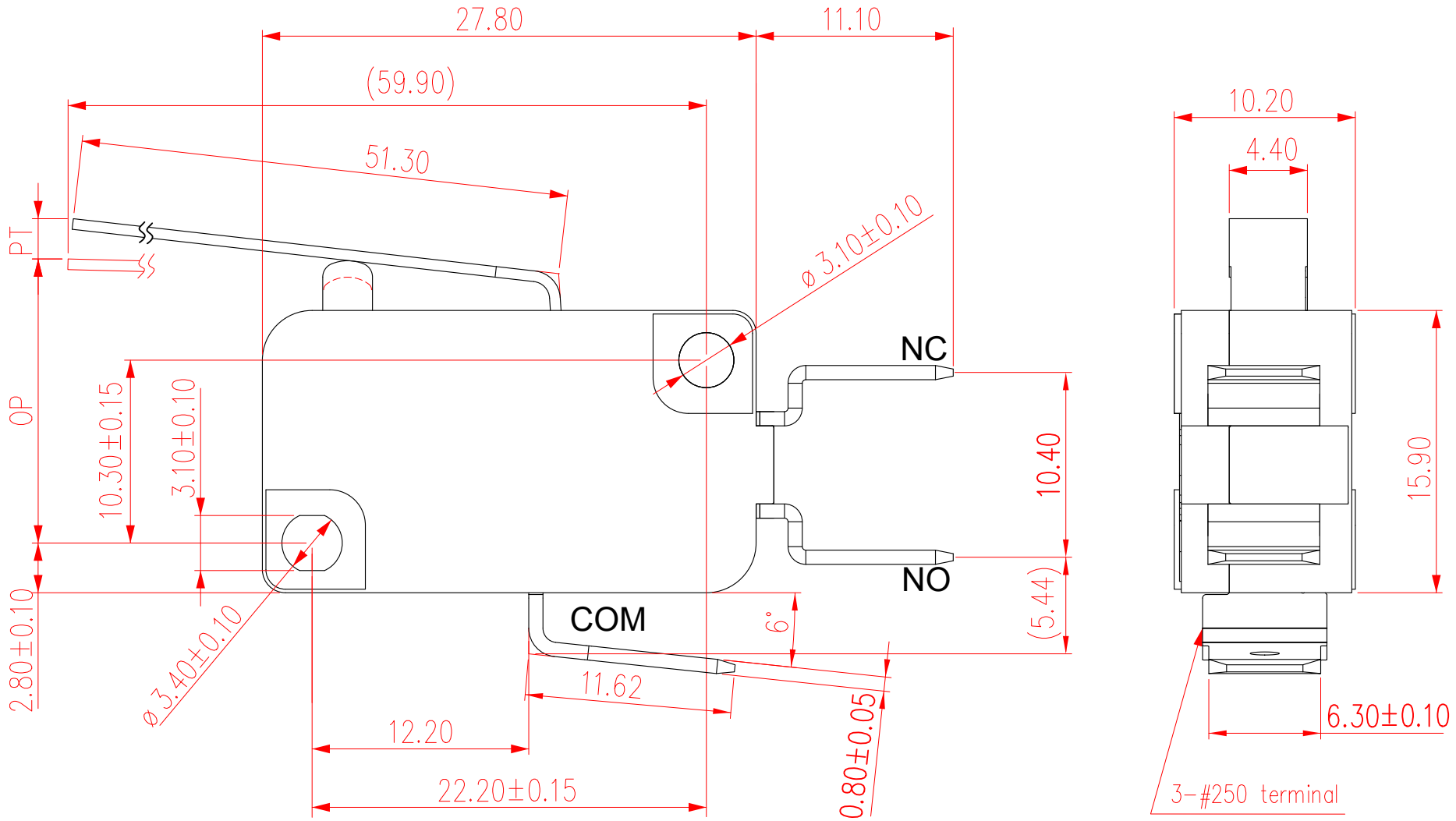


| Tolerance |
|---|
| X.X ±0.2 |
| XX.X ±0.4 |

| | | | | | |
|---|---|---|---|---|---|
| VIEW | | SIZE | A4 | UNIT | mm |
| DATE | MAR-24-2015 | VER. | 1.1 | FILE NAME | VA1-03E0-R |
| APPROVAL | 沈俊榮 | CONFIRM | 張立人 | DESIGN | 陳立業 |

新巨企業股份有限公司 ZIPPY TECHNOLOGY CORP.

# Marking drawing

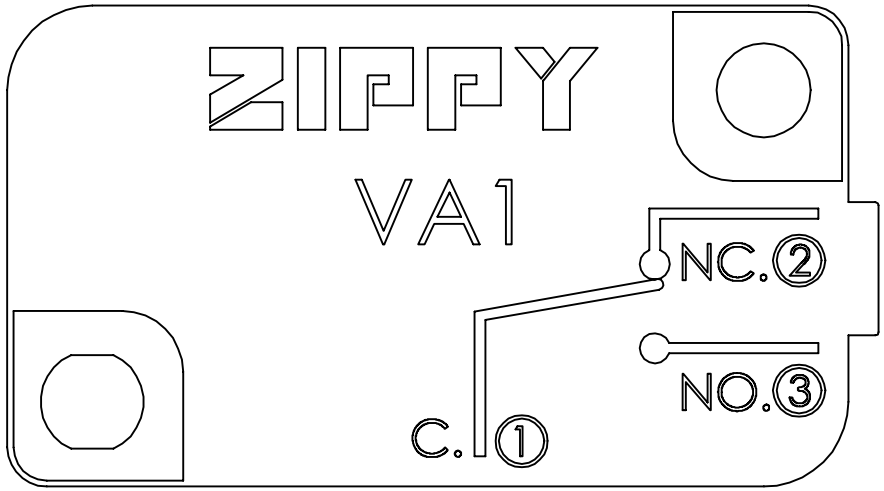


COVER

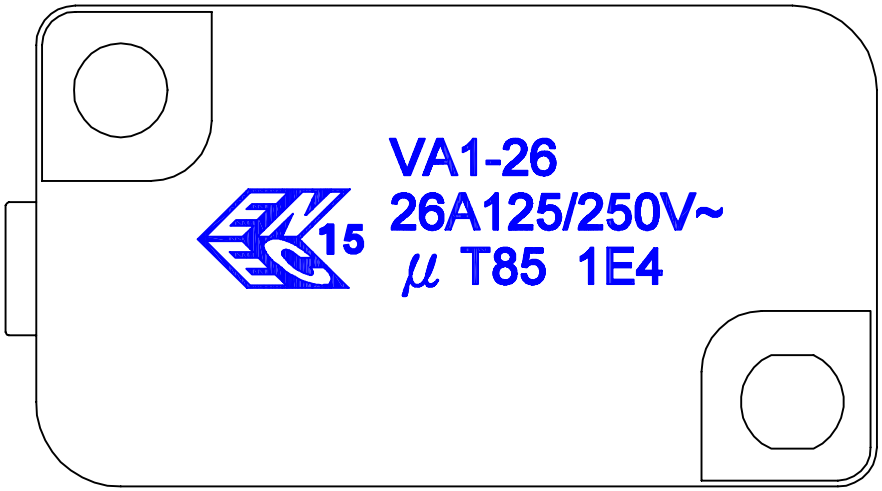


CASE

This page shows switch marking only.
此頁僅顯示開關印字，外觀參照外觀圖
Marking can either be printed or molded
印字可為印刷或模刻

| | | | | | |
|---|---|---|---|---|---|
| VIEW | | SIZE | A4 | UNIT | mm |
| DATE | 2020.11.17 | VER. | 1.0 | FILE NAME | VA1-26 |
| APPROVAL | 沈俊榮 | CONFIRM | 許志誠 | DESIGN | 陳立業 |

新巨企業股份有限公司 ZIPPY TECHNOLOGY CORP.

**CAUTIONS:**

注意事項

1:To secure the switch, please use an M3 small screw on a flat surface and tighten with plane washers or spring washers to securely mount the Switch, using a maximum torque of 0.59N·m.

若使用定位孔型式，請使用M3小型螺絲固定在平面上，並使用平墊圈或者彈性墊圈以便安全的鎖固開關，鎖固扭力請勿超過0.59 N·m.

2: To ensure the best performance of the switch, when handling/installing the switch, please do not apply uneven pressure to the direction indicated by the arrow in (Figure -1). Any uneven pressure or pressure direction other than the operating direction might be harmful or damage the switch performance.

為確保開關正常運作，安裝及取用開關時，請勿直接施加壓力在(圖-1)中箭頭所指示的方向。如圖所示，任何不對稱的壓力或作動方向以外的壓力都不適用在開關按柄上。

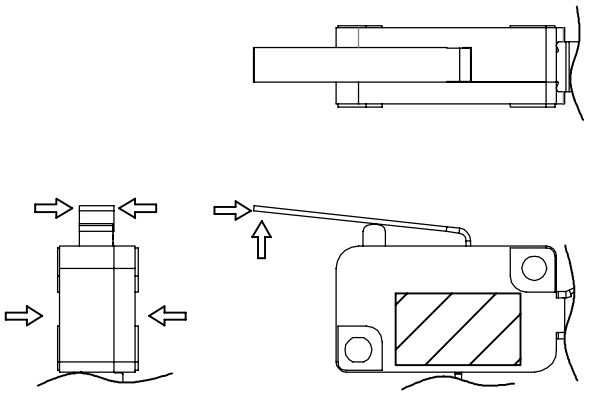

Figure-1

| | | | | | |
|---|---|---|---|---|---|
| 新巨企業股份有限公司 | ZIPPY TECHNOLOGY CORP. | VIEW | | SIZE | A4 | UNIT | mm |
| | | DATE | 2019.12.17 | VER. | 1.0 | FILE NAME | VA1－CAUTIONS |
| | | APPROVAL | 沈俊榮 | CONFIRM | 許志誠 | DESIGN | 陳立業 |