ZIPPY TECHNOLOGY CORP.

10F, NO.50, MIN CHYUAN ROAD,
SHIN-TIEN CITY, TAIPEI COUNTY,
TAIWAN, R.O.C

TEL: 886-2-2918-8512 / 886-2-2918-0603
FAX: 886-2-2915-5765 / 886-22916-0215
Http://www.zippy.com.tw

APPROVED DATA SHEET

Model: 1000810511(V3-25H-02D1-Z)

ISSUED DATE: 2023.08.16
APPROVED NO.: 1000810511.E

The undersigned guarantee of the model switches is meets the following specifications.

1.Operation Characteristics

Operating Force (OF)	:	Max. 374 gf
Releasing Force (RF)	:	Min. 47 gf
Free Position (FP)	:	Max. 21.3 mm
Operating Position (OP)	:	15.0±1.5 mm
Movement Differential (MD)	:	Max. 2.7 mm
Over-travel (OT)	:	Min. 1.0 mm
Pre-travel (PT)	:	Max. 4.8 mm

2. Specifications

Initial Contact Resistance	:	Max. 30 mΩ . (Measured by ohm meter –Open Voltage<1VDC, Driver current -100mA) Before measure the switch contact resistance, please press the switch three times on and off.
Initial Dielectric Strength	:	1,500VAC (50-60HZ) for one minute between contacts. 1,500VAC/minute (50-60HZ) between Live-parts and dead metal parts.
Insulation Resistance	:	Min. 100 MΩ (500 VDC/ minute) between Live-parts and dead metal parts.
Circuit Arrangement	:	SPST (Single pole single throw – Full disconnection, gap>3mm)
Rating	:	25 A 125/250VAC; 1HP 125/250VAC; 10.1(8)A 125/250VAC
Service Life	:	Min. 10,000 operations.
Rating Load	:	Resistive Load and Motor Load.
Operating Frequency	:	10~30 operations per minute.
Safety Certificate	:	UL, cUL, ENEC
Mechanical Service Life	:	Min. 500,000 operations.
Operating Frequency	:	Max. 120 operations per minute.

Operating application of the switch : Set the switch pushing distance from 60% to 90% of the specified OT value.

ZIPPY TECHNOLOGY CORP.

10F, NO.50, MIN CHYUAN ROAD,
SHIN-TIEN CITY, TAIPEI COUNTY,
TAIWAN, R.O.C

TEL: 886-2-2918-8512 / 886-2-2918-0603
FAX: 886-2-2915-5765 / 886-22916-0215
Http://www.zippy.com.tw

APPROVED DATA SHEET

Model: 1000810511(V3-25H-02D1-Z)

ISSUED DATE: 2023.08.16
APPROVED NO.: 1000810511.E

3. Environments

Operating Temperature	:	-40℃ ~ 125℃ (with no icing)
Vibration Resistance	:	10~55Hz, displacement 0.75mm(p-p)
Shock Resistance	:	Destruction: 1,000 m/s^2 {approx. 100G} max. Malfunction: 300 m/s^2 {approx. 30G} max.

(For the pin plunger models, the vibration & shock condition apply for use at the free position and total travel position)
(For the lever models, the vibration & shock condition apply for use at the total travel position)

Soldering by hand : 350 ℃ maximum within 5 seconds.

4. Caution:

or click the link→ https://www.zippy.com/ecmodelcautions/micro_switch_cautions.pdf

ZIPPY TECHNOLOGY CORP.
陳立業

PREPARED
許志誠

CHECKED
沈俊榮

APPROVED

Dimensions drawing

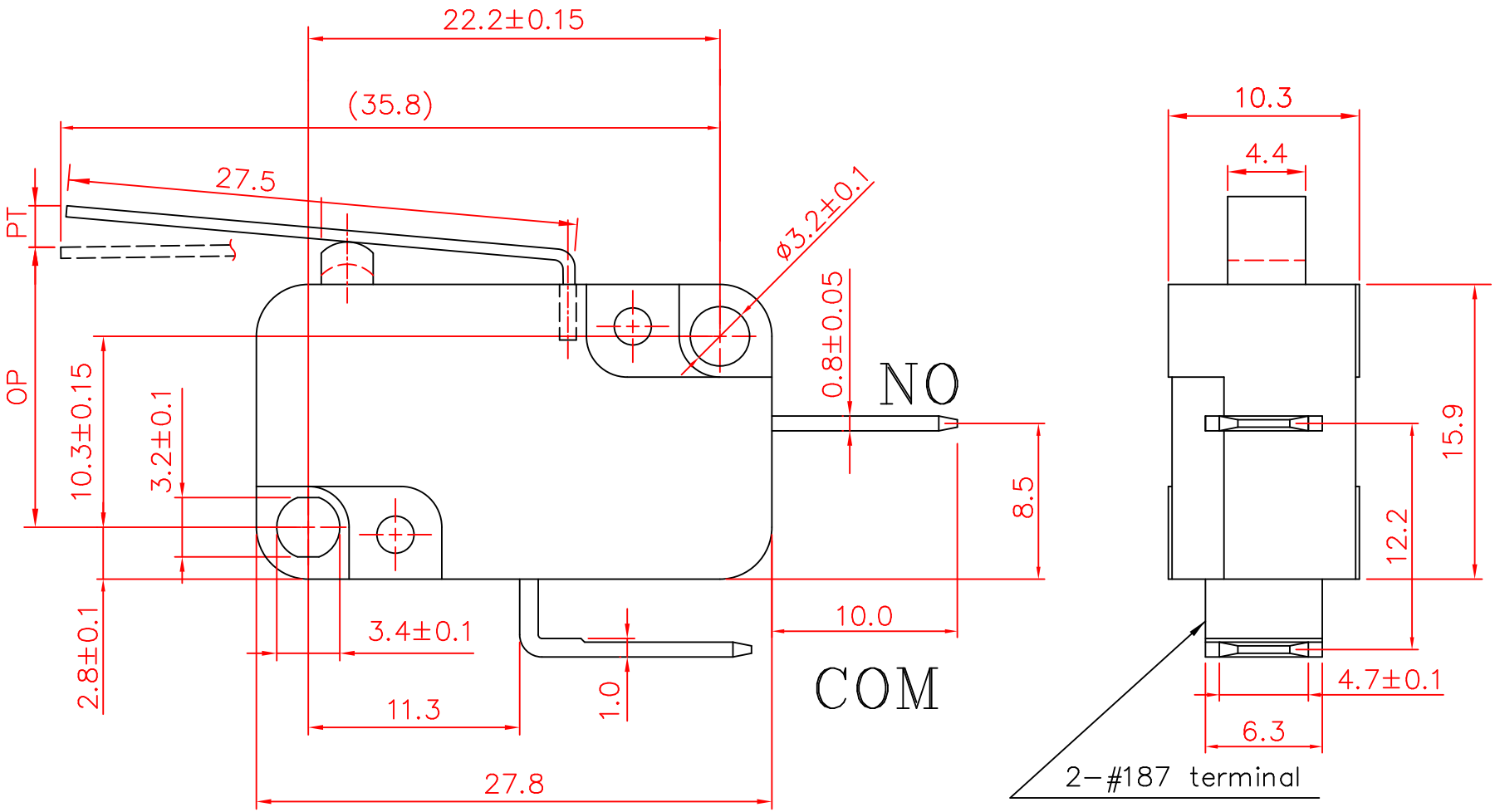

Tolerance	
X.X	±0.2
XX.X	±0.4

VIEW		SIZE	A4	UNIT	mm
DATE	APR.22.2015	VER.	1.5	FILE NAME	V3-02D1-R
APPROVAL	沈俊榮	CONFIRM	張立人	DESIGN	陳立業

新巨企業股份有限公司

ZIPPY TECHNOLOGY CORP.

Marking drawing

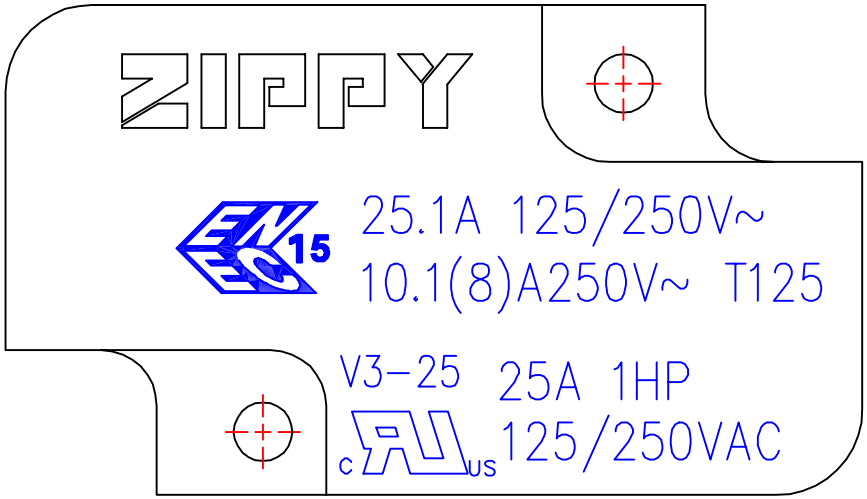

COVER

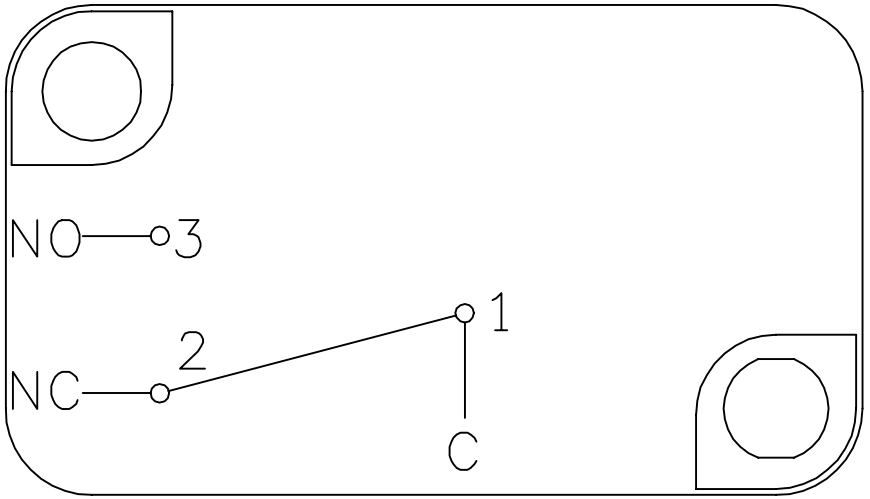

CASE

This page shows switch marking only.
此頁僅顯示開關印字，外觀參照外觀圖
Marking can either be printed or molded
印字可為印刷或模刻

VIEW		SIZE	A4	UNIT	mm
DATE	2020.11.09	VER.	1.5	FILE NAME	V3-25-02
APPROVAL	沈俊榮	CONFIRM	許志誠	DESIGN	陳立業

新巨企業股份有限公司 ZIPPY TECHNOLOGY CORP.