ZIPPY TECHNOLOGY CORP.

10F, NO.50, MIN CHYUAN ROAD,
SHIN-TIEN CITY, TAIPEI COUNTY,
TAIWAN, R.O.C

TEL: 886-2-2918-8512 / 886-2-2918-0603
FAX: 886-2-2915-5765 / 886-22916-0215
Http://www.zippy.com.tw

APPROVED DATA SHEET

Model: 1001121011(SM1-N6S-01D0-Z)

ISSUED DATE: 2023.12.26
APPROVED NO.: 1001121011.D

The undersigned guarantee of the model switches is meets the following specifications.

1.Operation Characteristics

Operating Force (OF)	:	Max. 50 gf
Releasing Force (RF)	:	Min. 6 gf
Free Position (FP)	:	Max. 14.60 mm
Operating Position (OP)	:	11.8±0.8 mm
Movement Differential (MD)	:	Max. 0.80 mm
Over-travel (OT)	:	Min. 0.60 mm
Pre-travel (PT)	:	Max. 3.60 mm

2. Specifications

Initial Contact Resistance	:	Max. 300 mΩ . (Measured by ohm meter –Open Voltage<1VDC, Driver current -100mA) Before measure the switch contact resistance, please press the switch three times on and off.
Initial Dielectric Strength	:	500VAC(50-60HZ)/minute between contacts. 1,500VAC(50-60HZ)/minute between Live-parts and dead metal parts.
Insulation Resistance	:	Min. 100 MΩ (500 VDC/ minute) between Live-parts and dead metal parts.
Circuit Arrangement	:	SPDT (Single pole double throw)
Rating	:	6A 125/250VAC; 5A 30VDC
Service Life	:	Min. 10,000 operations.
Rating Load	:	Resistive Load.
Operating Frequency	:	10~30 operations per minute.
Safety Certificate		UL, cUL, ENEC
Mechanical Service Life	:	Press the Switch to operation position - Min. 5,000,000 operations.
Operating Frequency	:	Max. 120 operations per minute.

ZIPPY TECHNOLOGY CORP.

10F, NO.50, MIN CHYUAN ROAD,
SHIN-TIEN CITY, TAIPEI COUNTY,
TAIWAN, R.O.C

TEL: 886-2-2918-8512 / 886-2-2918-0603
FAX: 886-2-2915-5765 / 886-22916-0215
Http://www.zippy.com.tw

APPROVED DATA SHEET

Model: 1001121011(SM1-N6S-01D0-Z)

==========

ISSUED DATE: 2023.12.26
APPROVED NO.: 1001121011.D

3. Environments

Operating Temperature	:	-40℃ ~ 125℃ (with no icing)
Vibration Resistance	:	10~55Hz, displacement 0.75mm(p-p)
Shock Resistance	:	Destruction: 1,000 m/s^2 {approx. 100G} max. Malfunction: 300 m/s^2 {approx. 30G} max.

(For the pin plunger models, the vibration & shock condition apply for use at the free position and total travel position)
(For the lever models, the vibration & shock condition apply for use at the total travel position)

Soldering by hand	:	350℃ maximum within 5 seconds.
Soldering bath	:	260℃ maximum within 5 seconds.

4. Caution:

Micro Switch Cautions

or click the link→ https://www.zippy.com/ecmodelcautions/micro_switch_cautions.pdf

ZIPPY TECHNOLOGY CORP.
卓妍蓁

PREPARED
簡永鎮

CHECKED
沈俊榮

APPROVED

Dimensions drawing

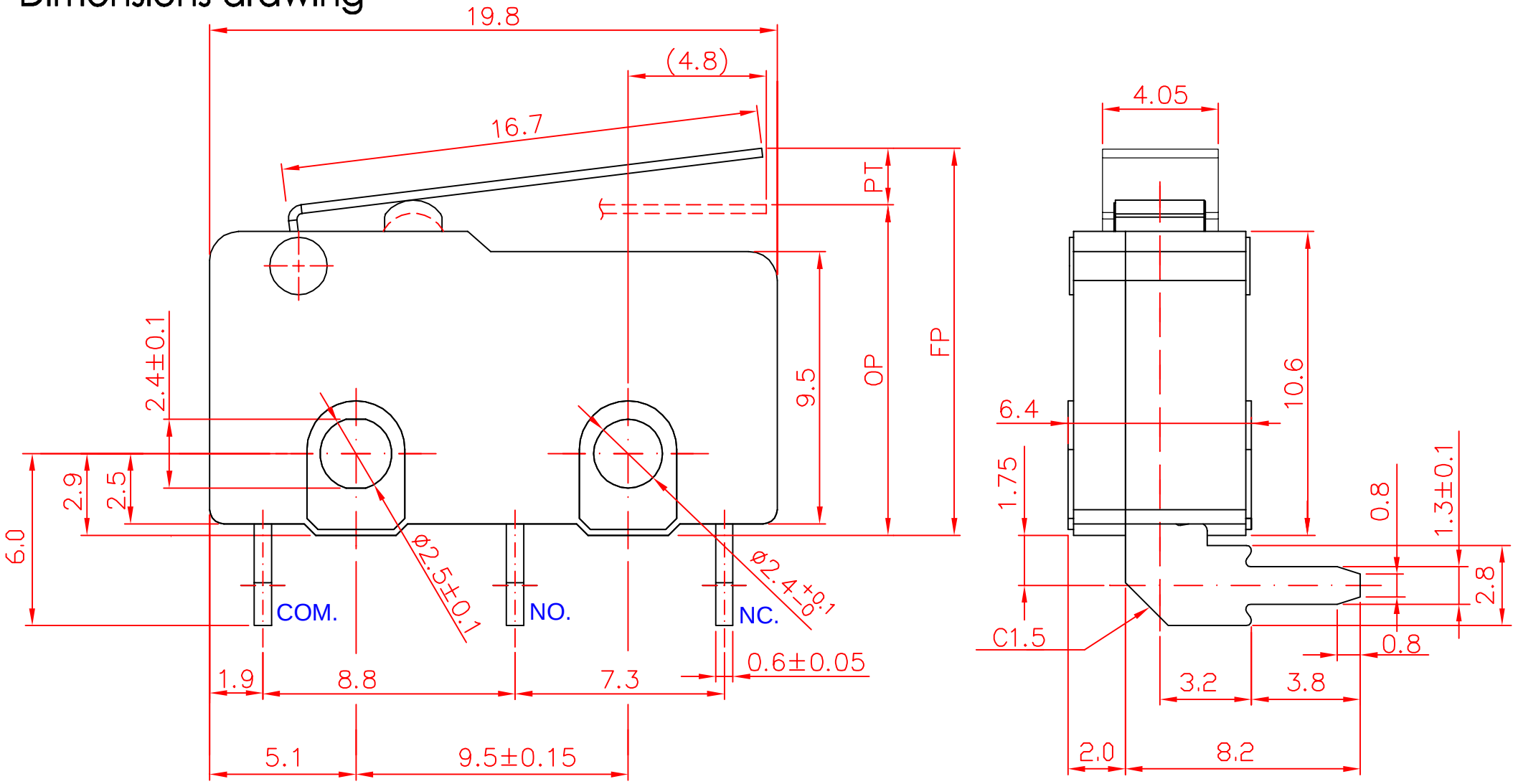

Tolerance	
X.X	± 0.2
XX.X	± 0.4

VIEW		SIZE	A4	UNIT	mm
DATE	Jan.04.2012	VER.	1.4	FILE NAME	SM1-01D0
APPROVAL	李金龍	CONFIRM	張哲維	DESIGN	廖剛緯

新巨企業股份有限公司 ZIPPY TECHNOLOGY CORP.

Marking drawing

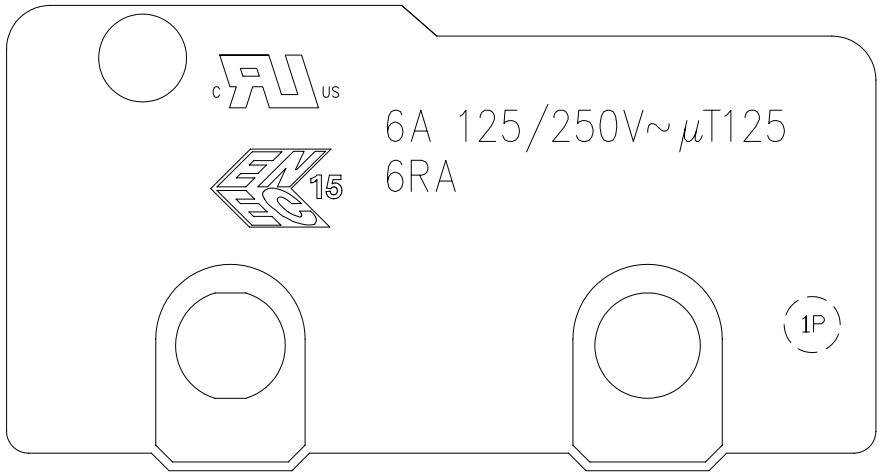

COVER

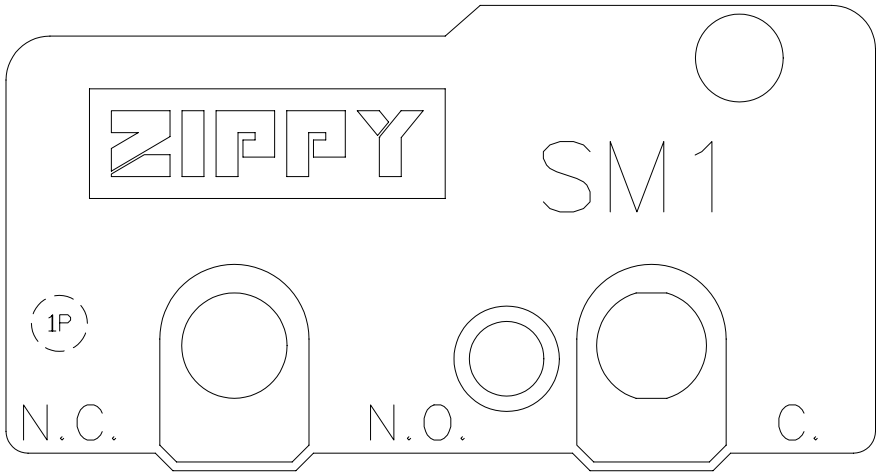

CASE

This page shows switch marking only.
此頁僅顯示開關印字，外觀參照外觀圖
Marking can either be printed or molded
印字可為印刷或模刻

VIEW		SIZE	A4	UNIT	mm
DATE	2020.11.06	VER.	1.5	FILE NAME	SM1-N6
APPROVAL	沈俊榮	CONFIRM	張立人	DESIGN	張奕銨

新巨企業股份有限公司

ZIPPY TECHNOLOGY CORP.