ZIPPY TECHNOLOGY CORP.

10F, NO.50, MIN CHYUAN ROAD,
SHIN-TIEN CITY, TAIPEI COUNTY,
TAIWAN, R.O.C

TEL: 886-2-2918-8512 / 886-2-2918-0603
FAX: 886-2-2915-5765 / 886-22916-0215
Http://www.zippy.com.tw

APPROVED DATA SHEET

Model: 1000140699(DW-N3S-04A0D-Z)

ISSUED DATE: 2023.05.23
APPROVED NO.: 1000140699.F

The undersigned guarantee of the model switches is meets the following specifications.

1.Operation Characteristics

Operating Force (OF)	:	Max. 160 gf
Releasing Force (RF)	:	Min. 45 gf
Free Position (FP)	:	Max. 10.1 mm
Operating Position (OP)	:	6.2±0.8 mm
Movement Differential (MD)	:	Max. 0.7 mm
Over-travel (OT)	:	Min. 1.65 mm
Pre-travel (PT)	:	Max. 4.8 mm

2. Specifications

Initial Contact Resistance	:	Max. 100 mΩ . (Measured by ohm meter –Open Voltage<1VDC, Driver current -100mA) Before measure the switch contact resistance, please press the switch three times on and off.
Initial Dielectric Strength	:	150VAC(50-60HZ)/minute between contacts.
		500VAC(50-60HZ)/minute between Live-parts and dead metal parts.
Insulation Resistance	:	Min. 100 MΩ (500 VDC/ minute) between Live-parts and dead metal parts.
Circuit Arrangement	:	SPDT (Single pole double throw)
Rating and Service Life	:	3A 12VDC - Min. 100,000 operations.
	:	3A 125VAC - Min. 10,000 operations.
Rating Load	:	Resistive Load.
Operating Frequency	:	10~30 operations per minute.
Safety Certificate	:	ENEC
Mechanical Service Life	:	Min. 500,000 operations.
Operating Frequency	:	Max. 120 operations per minute.
Protection	:	IP67 (excluding the terminals on terminal models)

ZIPPY TECHNOLOGY CORP.

10F, NO.50, MIN CHYUAN ROAD,
SHIN-TIEN CITY, TAIPEI COUNTY,
TAIWAN, R.O.C

TEL: 886-2-2918-8512 / 886-2-2918-0603
FAX: 886-2-2915-5765 / 886-22916-0215
Http://www.zippy.com.tw

APPROVED DATA SHEET

Model: 1000140699(DW-N3S-04A0D-Z)

ISSUED DATE: 2023.05.23
APPROVED NO.: 1000140699.F

3. Environments

Operating Temperature	:	-40℃~85℃ (DC Rating,with no icing)
Vibration Resistance	:	10~55Hz, displacement 0.75mm(p-p)
Shock Resistance	:	Destruction: 1,000 m/s^2 {approx. 100G} max. Malfunction: 300 m/s^2 {approx. 30G} max.

(For the pin plunger models, the vibration & shock condition apply for use at the free position and total travel position)
(For the lever models, the vibration & shock condition apply for use at the total travel position)

Soldering by hand	:	300℃ maximum within 5 seconds. 350℃ maximum within 3 seconds.
Soldering bath	:	260℃ maximum within 5 seconds.

4. Caution:

Micro Switch Cautions

or click the link→ https://www.zippy.com/ecmodelcautions/micro_switch_cautions.pdf

ZIPPY TECHNOLOGY CORP.
簡素玲

PREPARED
張奕銨

CHECKED
沈俊榮

APPROVED

Dimensions drawing

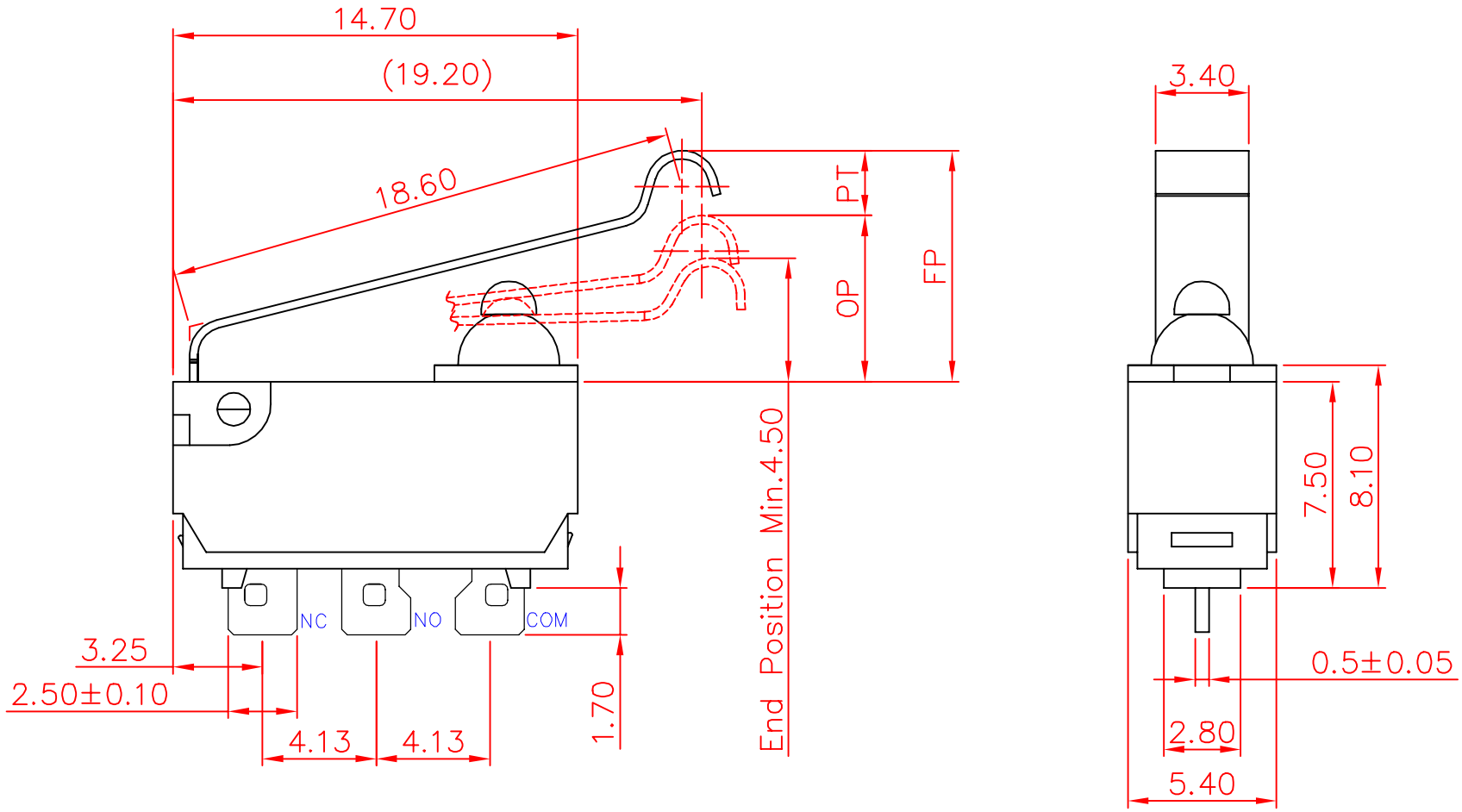

Tolerance	
X.X	± 0.2
XX.X	± 0.4

VIEW		SIZE	A4	UNIT	mm
DATE	2020.06.23	VER.	1.2	FILE NAME	DW-04A0D
APPROVAL	倪有庭	CONFIRM	黃俊嘉	DESIGN	歐大揮

新巨企業股份有限公司

ZIPPY TECHNOLOGY CORP.

Marking drawing

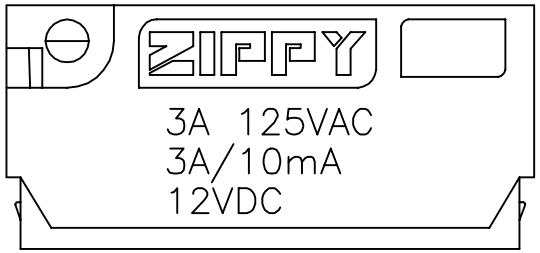

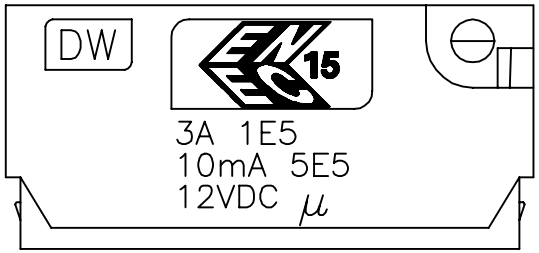

This page shows switch marking only.
此頁僅顯示開關印字，外觀參照外觀圖
Marking can either be printed or molded
印字可為印刷或模刻

Tolerance ±0.4

VIEW		SIZE	A4	UNIT	mm
DATE	2020.11.05	VER.	1.3	FILE NAME	DW-03-Z
APPROVAL	倪有庭	CONFIRM	黃俊嘉	DESIGN	歐大揮

新巨企業股份有限公司

ZIPPY TECHNOLOGY CORP.