ZIPPY TECHNOLOGY CORP.

10F, NO.50, MIN CHYUAN ROAD,
SHIN-TIEN CITY, TAIPEI COUNTY,
TAIWAN, R.O.C

TEL: 886-2-2918-8512 / 886-2-2918-0603
FAX: 886-2-2915-5765 / 886-22916-0215
Http://www.zippy.com.tw

APPROVED DATA SHEET

Model: 1000100457(DF-03S-3C-Z)

ISSUED DATE: 2023.10.24
APPROVED NO.: 1000100457.F

The undersigned guarantee of the model switches is meets the following specifications.

1.Operation Characteristics

Operating Force (OF)	:	Max.57 gf
Releasing Force (RF)	:	Min.12 gf
Free Position (FP)	:	Max.9.3 mm
Operating Position (OP)	:	7.9±0.7 mm
Movement Differential (MD)	:	Max. 0.29 mm
Over-travel (OT)	:	Min. 0.55 mm
Pre-travel (PT)	:	Max.2.1 mm

2. Specifications

Initial Contact Resistance	:	Max. 100 mΩ . (Measured by ohm meter –Open Voltage<1VDC, Driver current -100mA) Before measure the switch contact resistance, please press the switch three times on and off.
Initial Dielectric Strength	:	1,000VAC(50-60HZ)/minute between contacts. 1,500VAC(50-60HZ)/minute between Live-parts and dead metal parts.
Insulation Resistance	:	Min. 100 MΩ (500 VDC/ minute) between Live-parts and dead metal parts.
Circuit Arrangement	:	SPDT (Single pole double throw)
Rating	:	3A 125VAC; 3A 24VDC
Service Life	:	Min. 10,000 operations
Rating Load	:	Resistive Load
Operating Frequency	:	10~30 operations per minute
Safety Certificate	:	UL, cUL, ENEC
Mechanical Service Life	:	Min. 1,000,000 operations.
Operating Frequency	:	Max. 120 operations per minute.

Operating application of the switch : Set the switch pushing distance from 60% to 90% of the specified OT value.

ZIPPY TECHNOLOGY CORP.

10F, NO.50, MIN CHYUAN ROAD,
SHIN-TIEN CITY, TAIPEI COUNTY,
TAIWAN, R.O.C

TEL: 886-2-2918-8512 / 886-2-2918-0603
FAX: 886-2-2915-5765 / 886-22916-0215
Http://www.zippy.com.tw

APPROVED DATA SHEET

Model: 1000100457(DF-03S-3C-Z)

ISSUED DATE: 2023.10.24
APPROVED NO.: 1000100457.F

3. Environments

Operating Temperature	:	-40℃ ~ 85℃ (with no icing)
Vibration Resistance	:	10~55Hz, displacement 0.75mm(p-p)
Shock Resistance	:	Destruction: 1,000 m/s^2 {approx. 100G} max. Malfunction: 300 m/s^2 {approx. 30G} max.

(For the pin plunger models, the vibration & shock condition apply for use at the free position and total travel position)
(For the lever models, the vibration & shock condition apply for use at the total travel position)

Soldering by hand	:	260℃ maximum within 5 seconds. 300℃ maximum within 3 seconds.
Soldering bath	:	260℃ maximum within 5 seconds. (PCB thickness more than Min 1.6 mm.)

4. Caution:

Micro Switch Cautions

or click the link→ https://www.zippy.com/ecmodelcautions/micro_switch_cautions.pdf

ZIPPY TECHNOLOGY CORP.
簡素玲

PREPARED
簡永鎮

CHECKED
沈俊榮

APPROVED

Dimensions drawing

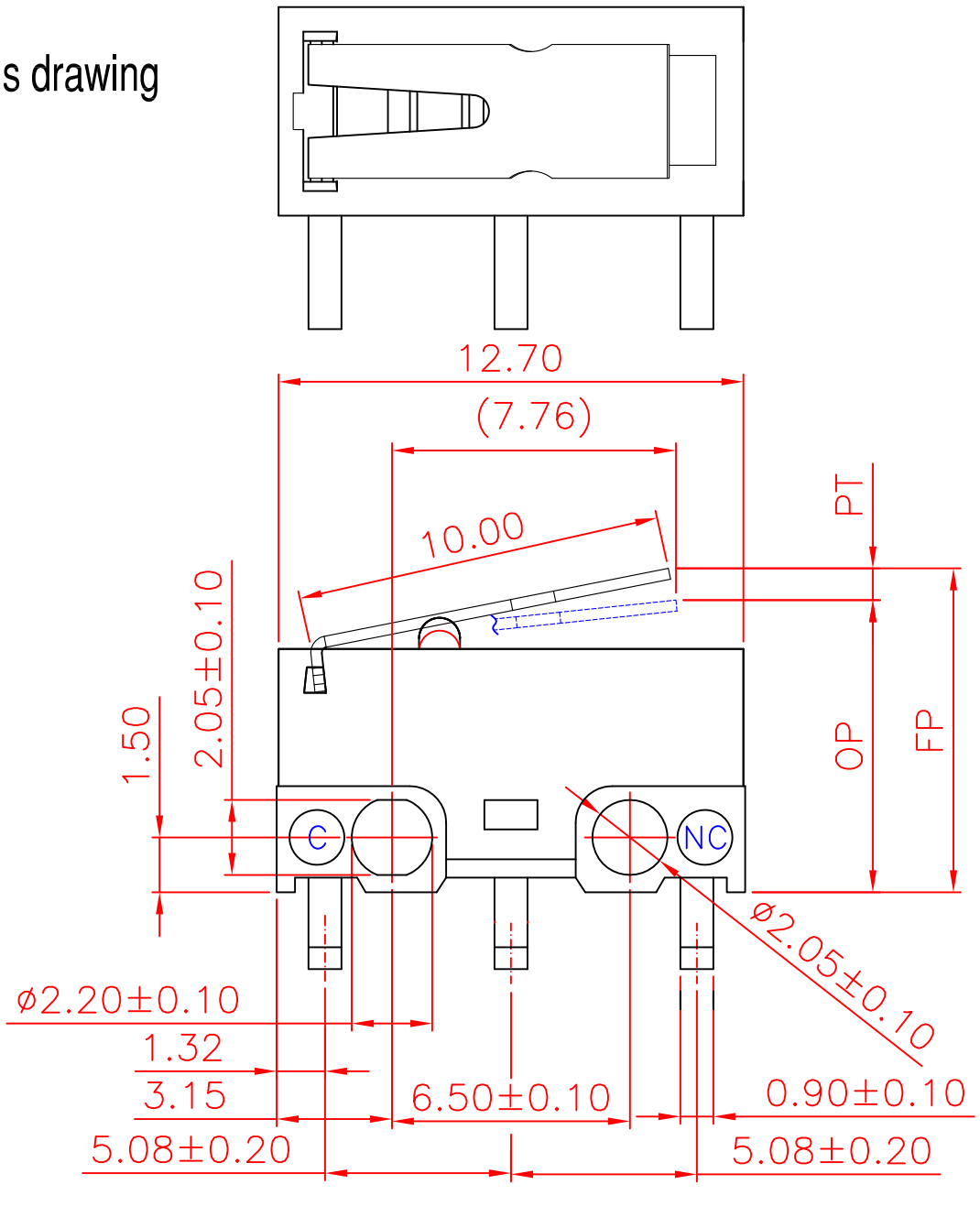

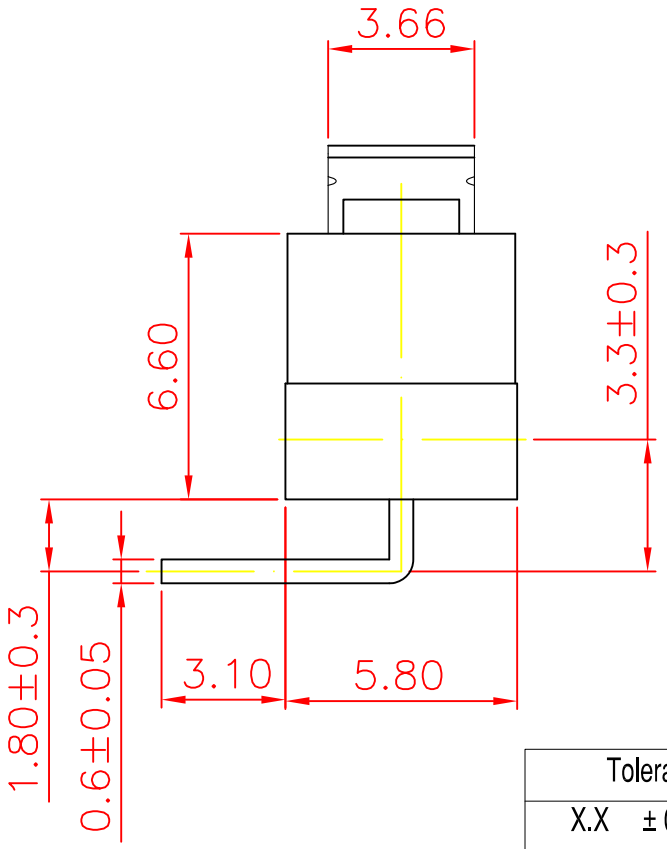

Tolerance	
X.X	±0.2
XX.X	±0.4

VIEW		SIZE	A4	UNIT	mm
DATE	OCT.20.2010	VER.	1.1	FILE NAME	DF-03C0
APPROVAL	李金龍	CONFIRM	張哲維	DESIGN	謝佩君

新巨企業股份有限公司 ZIPPY TECHNOLOGY CORP.

Marking drawing

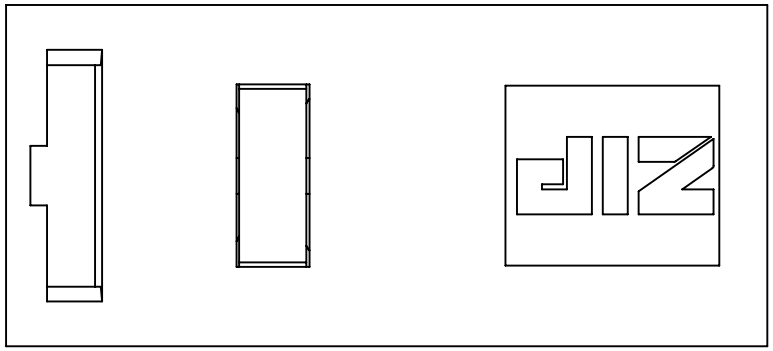

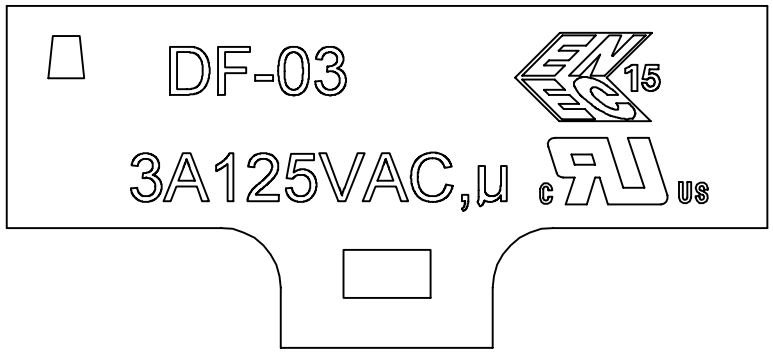

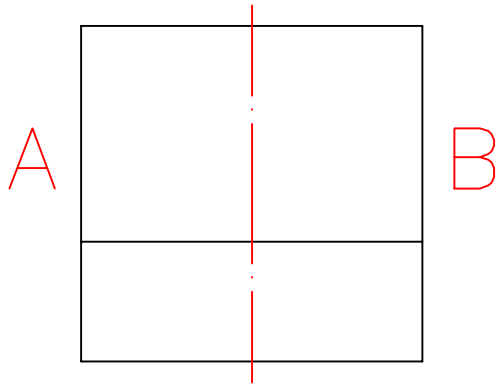

This page shows switch marking only.
此頁僅顯示開關印字，外觀參照外觀圖
Marking will be randomly on side A or side B
印字可為A面或B面
Marking can either be printed or molded
印字可為印刷或模刻

VIEW		SIZE	A4	UNIT	mm
DATE	2020.11.06	VER.	2.0	FILE NAME	DF-03
APPROVAL	沈俊榮	CONFIRM	張奕銨	DESIGN	張立人

新巨企業股份有限公司

ZIPPY TECHNOLOGY CORP.