ZIPPY TECHNOLOGY CORP.

10F, NO.50, MIN CHYUAN ROAD,
SHIN-TIEN CITY, TAIPEI COUNTY,
TAIWAN, R.O.C

TEL: 886-2-2918-8512 / 886-2-2918-0603
FAX: 886-2-2915-5765 / 886-22916-0215
Https://www.zippy.com

APPROVED DATA SHEET

Model: 1001560443(VA2-26Q0-00E0-Z)

ISSUED DATE: 2024.09.05
APPROVED NO.: 1001560443.F

The undersigned guarantee of the model switches is meets the following specifications.

1.Operation Characteristics

Operating Force (OF)	:	Max.330 gf
Releasing Force (RF)	:	Min.60 gf
Operating Position (OP)	:	14.7 ± 0.5 mm
Movement Differential (MD)	:	Max. 0.4 mm
Over-travel (OT)	:	Min. 0.8 mm
Pre-travel (PT)	:	Max. 1.72 mm

2. Specifications

Initial Contact Resistance	:	Max. 100 mΩ. (Initial) (Measured by ohm meter –Open Voltage<1VDC, Driver current -100mA) Before measure the switch contact resistance, please press the switch three times on and off.
Initial Dielectric Strength	:	500VAC(50-60HZ)/minute between contacts. 1,500VAC(50-60HZ)/minute between Live-parts and dead metal parts.
Insulation Resistance	:	Min. 100 MΩ(500 VDC/ minute).
Circuit Arrangement	:	SPDT (Single pole double throw)
Rating	:	26A 125/250VAC
Service Life	:	Min. 10,000 operations.
Operating Frequency	:	10~30 operations per minute.
Rating Load	:	Resistive Load (R Load).
Safety Certificate	:	UL, cUL, ENEC

ZIPPY TECHNOLOGY CORP.

10F, NO.50, MIN CHYUAN ROAD,
SHIN-TIEN CITY, TAIPEI COUNTY,
TAIWAN, R.O.C

TEL: 886-2-2918-8512 / 886-2-2918-0603
FAX: 886-2-2915-5765 / 886-22916-0215
Https://www.zippy.com

APPROVED DATA SHEET

Model: 1001560443(VA2-26Q0-00E0-Z)

ISSUED DATE: 2024.09.05
APPROVED NO.: 1001560443.F

3. Environments

Operating Temperature	:	-40℃ ~ 55℃ (with no icing)
Vibration Resistance	:	10~55Hz, displacement 0.75mm(p-p) 2hr
Shock Resistance	:	Destruction: 1,000 m/s^2 {approx. 100G} max. Malfunction: 300 m/s^2 {approx. 30G} max.

(For the pin plunger models, the vibration & shock condition apply for use at the free position and total travel position)
(For the lever models, the vibration & shock condition apply for use at the total travel position)

Soldering by hand	:	350 ℃ maximum within 3 seconds.

4. Caution:

Micro Switch Cautions

or click the link→ https://www.zippy.com/ecmodelcautions/micro_switch_cautions.pdf

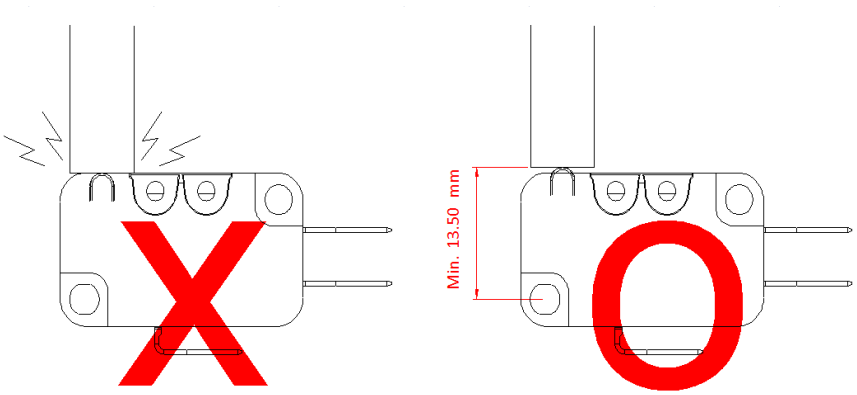

ZIPPY TECHNOLOGY CORP.
黃玉燕

PREPARED
林杰毅

CHECKED
王永輝

APPROVED

Dimensions drawing

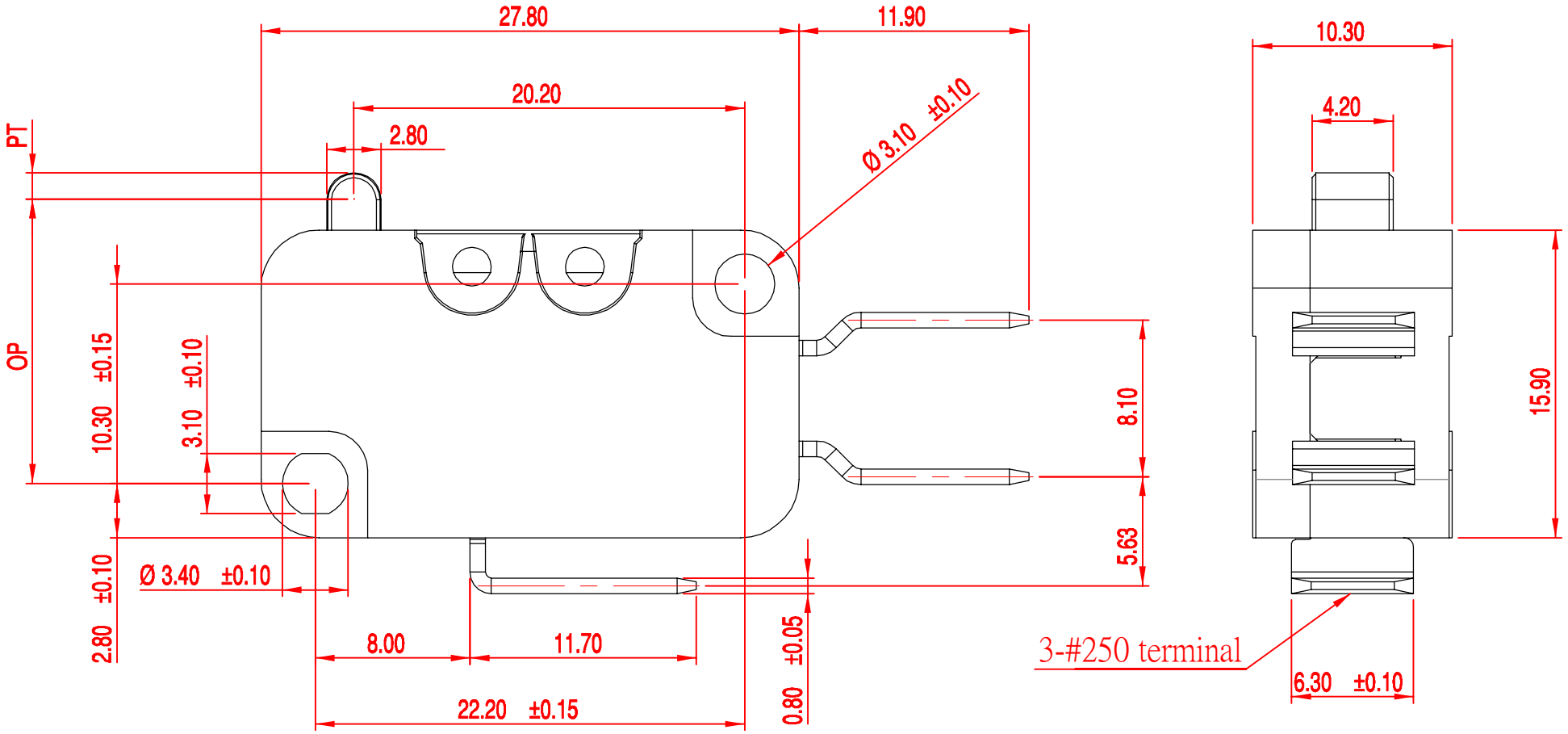

Tolerance	
X.X	± 0.2
XX.X	± 0.4

VIEW		SIZE	A4	UNIT	mm
DATE	AUG-15-2013	VER.	1.0	FILE NAME	VA2-000E0
APPROVAL	李金龍	CONFIRM	張哲維	DESIGN	沈俊榮

新巨企業股份有限公司

ZIPPY TECHNOLOGY CORP.

Marking drawing

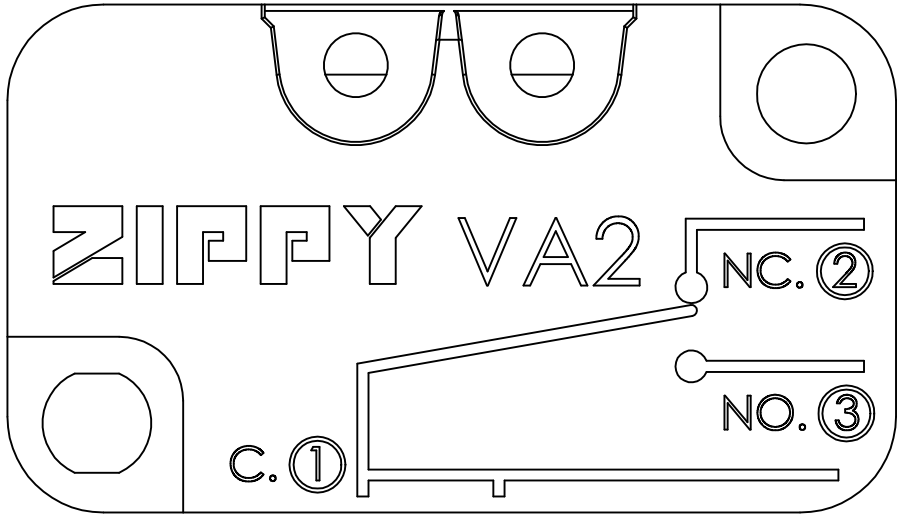

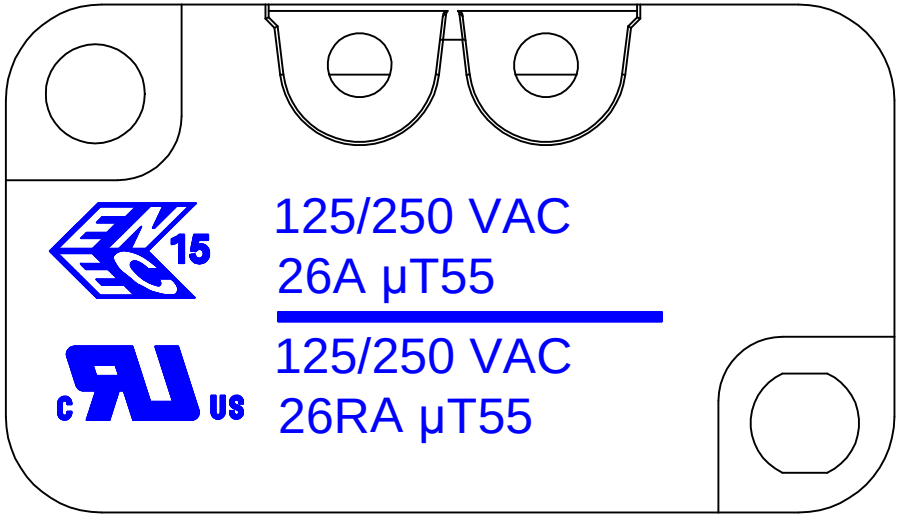

COVER

CASE

This page shows switch marking only.
此頁僅顯示開關印字，外觀參照外觀圖
Marking can either be printed or molded
印字可為印刷或模刻

VIEW		SIZE	A4	UNIT	mm
DATE	2020.11.16	VER.	1.3	FILE NAME	VA2-26
APPROVAL	倪有庭	CONFIRM	許粲淳	DESIGN	王永輝

新巨企業股份有限公司 ZIPPY TECHNOLOGY CORP.