ZIPPY TECHNOLOGY CORP.

10F, NO.50, MIN CHYUAN ROAD,
SHIN-TIEN CITY, TAIPEI COUNTY,
TAIWAN, R.O.C

TEL: 886-2-2918-8512 / 886-2-2918-0603
FAX: 886-2-2915-5765 / 886-22916-0215
Http://www.zippy.com.tw

APPROVED DATA SHEET

Model:1001640012(DW32-P1H-00A2-MF001A-Z)

ISSUED DATE: 2023.06.15
APPROVED NO.: 1001640012.C

The undersigned guarantee of the model switches is meets the following specifications.

1.Operation Characteristics

Operating Force (OF)	:	Max. 160 gf	Indicates operating load for NC contact to achieve OFF status
Free Position (FP)	:	Max. 7.7 mm	
Operating Position on NC side (OP)	:	7.1±0.25 mm	Indicates position for NC contact to achieve OFF status
Over-travel	:	1.75 mm(ref.)	
	:		

2. Specifications

Initial Contact Resistance	:	Max. 600mΩ. Before measure the switch contact resistance, please press the switch three times on and off.
Initial Dielectric Strength	:	500VAC(50-60HZ)/minute between contacts. 1500VAC(50-60HZ)/minute between Live-parts and dead metal parts.
Insulation Resistance	:	Min. 100 MΩ(500 VDC/ minute) between Live-parts and dead metal parts.
Circuit Arrangement	:	SPST (Single pole single throw)
Rating & Service Life	:	50mA 16VDC - Min. 150,000 operations. 1mA 5VDC - Min. 300,000 operations. 100mA 12VDC - Min. 300,000 operations
Rating Load	:	Resistive Load.
Operating Frequency	:	Max.120 operations per minute.

Operating application of the switch : Set the switch pushing distance from 60% to 90% of the specified OT value.

Protection	:	IP67

ZIPPY TECHNOLOGY CORP.

10F, NO.50, MIN CHYUAN ROAD,
SHIN-TIEN CITY, TAIPEI COUNTY,
TAIWAN, R.O.C

TEL: 886-2-2918-8512 / 886-2-2918-0603
FAX: 886-2-2915-5765 / 886-22916-0215
Http://www.zippy.com.tw

APPROVED DATA SHEET

Model:1001640012(DW32-P1H-00A2-MF001A-Z)

==========

ISSUED DATE: 2023.06.15
APPROVED NO.: 1001640012.C

3. Environments

Operating Temperature	:	-40℃~85℃(with no icing)
Shock Resistance	:	Destruction: 1,000 m/s^2 {approx. 100G} max.
		Malfunction: 300 m/s^2 {approx. 30G} max.

(For the pin plunger models, the vibration & shock condition apply for use at the free position and total travel position)
(For the lever models, the vibration & shock condition apply for use at the total travel position)

Vibration Resistance	:	10~55Hz, displacement 0.75mm(p-p)
Soldering by hand	:	350℃ maximum with in 3 seconds.
Soldering by bath		260℃ maximum with in 5 seconds

4. Caution:

Slide Switch Cautions

or click the link→ https://www.zippy.com/ecmodelcautions/slide_switch_cautions.pdf

ZIPPY TECHNOLOGY CORP.
黃俊嘉

PREPARED
林杰毅

CHECKED
王永輝

APPROVED

Dimensions drawing

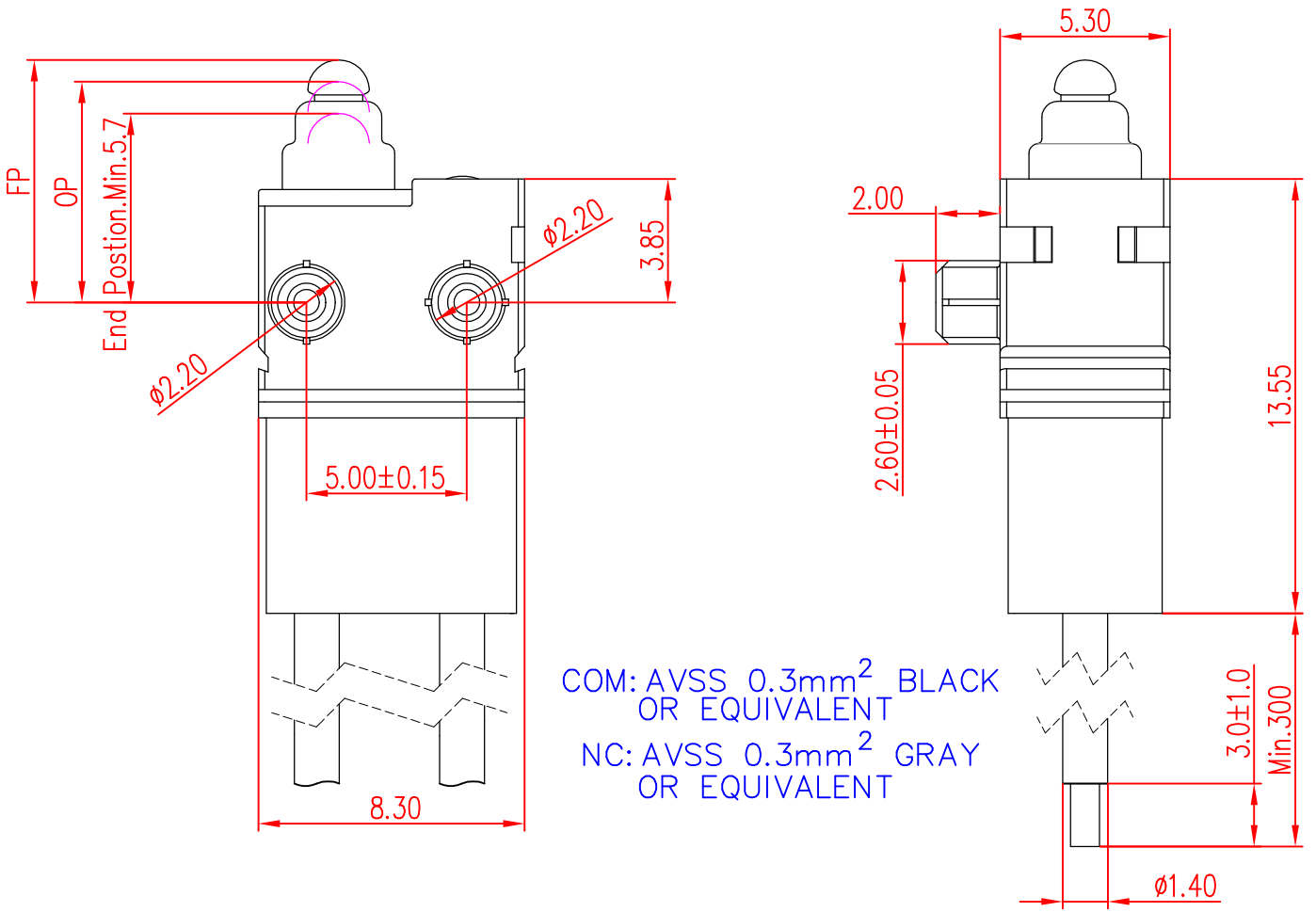

Tolerance	
X.X	± 0.2
XX.X	± 0.4

VIEW		SIZE	A4	UNIT	mm
DATE	2020.02.24	VER.	1.0	FILE NAME	DW32-00A2-MF001A
APPROVAL	倪有庭	CONFIRM	歐大揮	DESIGN	黃俊嘉

新巨企業股份有限公司 ZIPPY TECHNOLOGY CORP.

Marking drawing

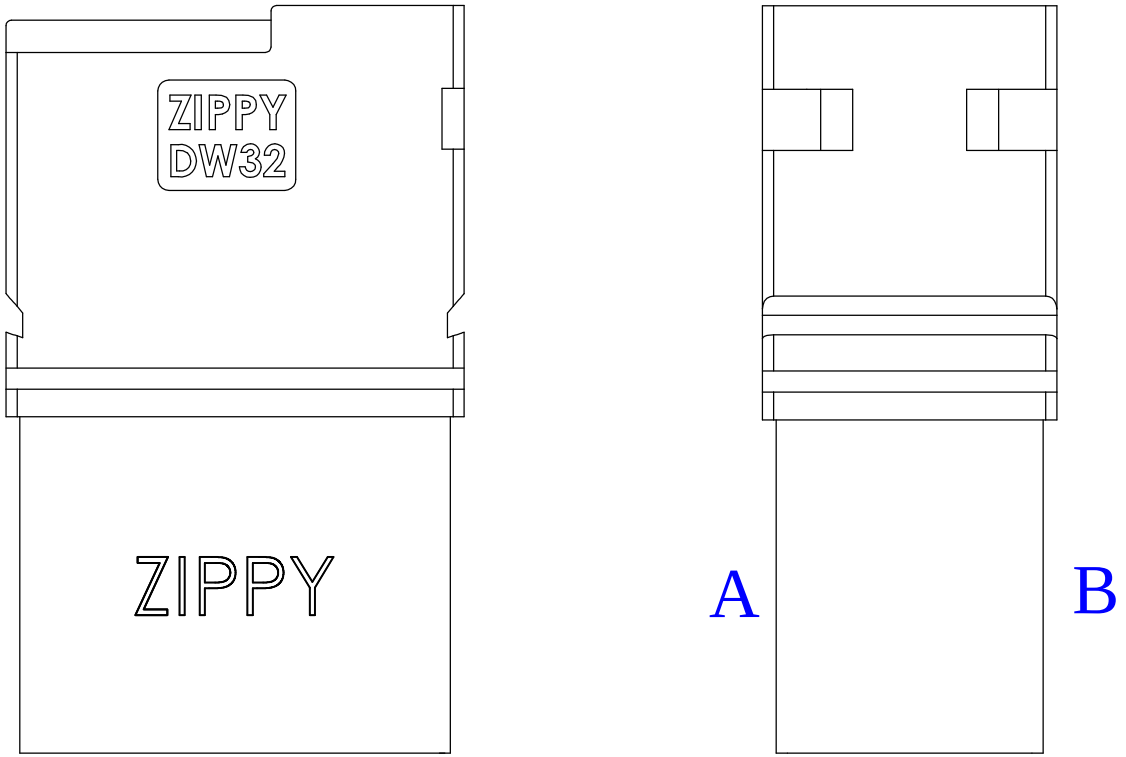

Marking will be randomly on side A or side B
印字可為A面或B面

This page shows switch marking only.
此頁僅顯示開關印字，外觀參照外觀圖

Marking can either be printed or molded
印字可為印刷或模刻

VIEW		SIZE	A4	UNIT	mm
DATE	2021.11.24	VER.	1.0	FILE NAME	DW32-01
APPROVAL	倪有庭	CONFIRM	歐大揮	DESIGN	黃俊嘉

新巨企業股份有限公司 ZIPPY TECHNOLOGY CORP.