ZIPPY TECHNOLOGY CORP.

10F, NO.50, MIN CHYUAN ROAD,
SHIN-TIEN CITY, TAIPEI COUNTY,
TAIWAN, R.O.C

TEL: 886-2-2918-8512 / 886-2-2918-0603
FAX: 886-2-2915-5765 / 886-22916-0215
Http://www.zippy.com.tw

APPROVED DATA SHEET

Model:1001630006(DW3-P1S-A01B0A-0A-Z)

ISSUED DATE: 2023.06.29
APPROVED NO.: 1001630006.E

The undersigned guarantee of the model switches is meets the following specifications.

1.Operation Characteristics

Operating Force (OF)	:	Max.185 gf	Indicates operating load for NO contact to achieve ON status
Free Position (FP)	:	Max. 15.7 mm	
Operating Position on NC side (OP)	:	14±0.6 mm	Indicates position for NC contact to achieve OFF status
Operating Position on NO side (OP)	:	13.45±0.6 mm	Indicates position for NO contact to achieve ON status
Over-travel on NC side (OT)	:	3.0mm (ref.)	
Over-travel on NO side (OT)	:	2.45mm (ref.)	

2. Specifications

Initial Contact Resistance	:	Max. 1Ω . Before measure the switch contact resistance, please press the switch three times on and off.
Initial Dielectric Strength	:	600VAC(50-60HZ)/minute between contacts. 1500VAC(50-60HZ)/minute between Live-parts and dead metal parts.
Insulation Resistance	:	Min. 100 MΩ (100 VDC/ minute) between Live-parts and dead metal parts.
Circuit Arrangement	:	SPDT (Single pole double throw)
Rating & Service Life	:	100mA 30VDC - Min. 300,000 operations. 1mA 5VDC - Min. 500,000 operations. 50mA 16VDC - Min. 500,000 operations.
Rating Load	:	Resistive Load.
Operating Frequency	:	Max.120 operations per minute.
Protection	:	IP67 (excluding the terminals on terminal models)

ZIPPY TECHNOLOGY CORP.

10F, NO.50, MIN CHYUAN ROAD,
SHIN-TIEN CITY, TAIPEI COUNTY,
TAIWAN, R.O.C

TEL: 886-2-2918-8512 / 886-2-2918-0603
FAX: 886-2-2915-5765 / 886-22916-0215
Http://www.zippy.com.tw

APPROVED DATA SHEET

Model:1001630006(DW3-P1S-A01B0A-0A-Z)

ISSUED DATE: 2023.06.29
APPROVED NO.: 1001630006.E

3. Environments

Operating Temperature	:	-40℃~85℃(with no icing)
Shock Resistance	:	Destruction: 1,000 m/s^2 {approx. 100G} max.
		Malfunction: 300 m/s^2 {approx. 30G} max.

(For the pin plunger models, the vibration & shock condition apply for use at the free position and total travel position)
(For the lever models, the vibration & shock condition apply for use at the total travel position)

Vibration Resistance	:	10~55Hz, displacement 0.75mm(p-p)
Soldering by hand	:	350℃ maximum with in 3 seconds.
Soldering by bath		260℃ maximum with in 5 seconds

4. Caution:

Slide Switch Cautions

or click the link→https://www.zippy.com/ecmodelcautions/slide_switch_cautions.pdf

ZIPPY TECHNOLOGY CORP.
簡素玲

PREPARED
許志誠

CHECKED
沈俊榮

APPROVED

Dimensions drawing

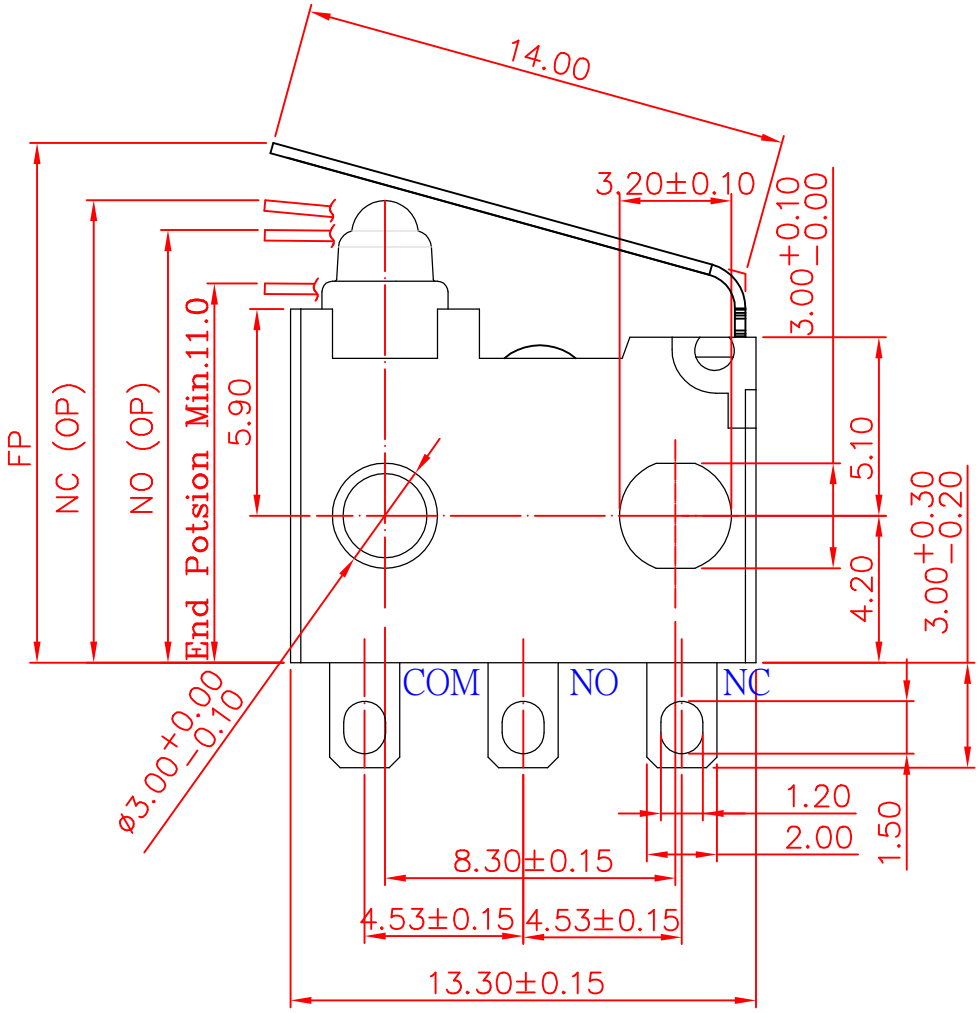

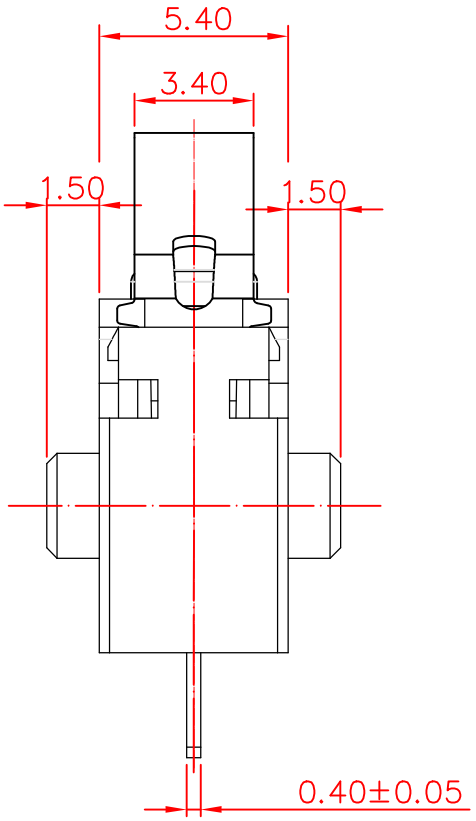

Tolerance	
X.XX	± 0.20
XX.XX	± 0.40

VIEW		SIZE	A4	UNIT	mm
DATE	2020.11.11	VER.	1.2	FILE NAME	DW3-A01B0A-0A
APPROVAL	沈俊榮	CONFIRM	張奕銨	DESIGN	許志誠

新巨企業股份有限公司

ZIPPY TECHNOLOGY CORP.

ver02

Marking drawing

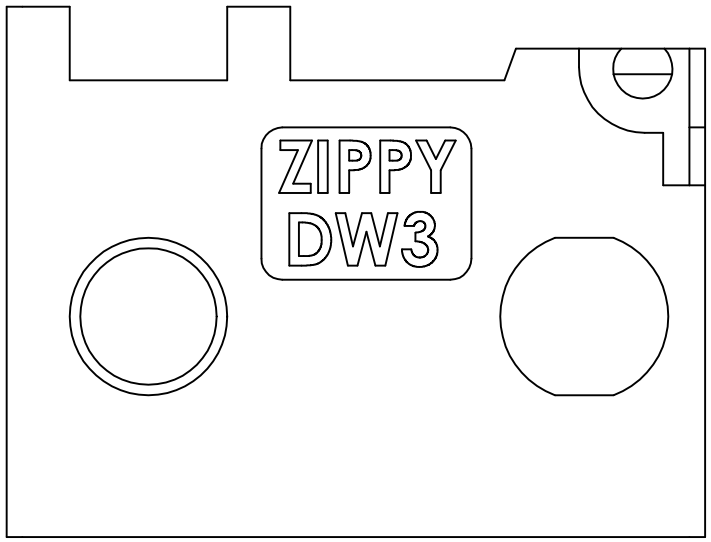

This page shows switch marking only.
此頁僅顯示開關印字，外觀參照外觀圖
Marking can either be printed or molded
印字可為印刷或模刻

VIEW		SIZE	A4	UNIT	mm
DATE	2020.11.05	VER.	1.4	FILE NAME	DW3-00
APPROVAL	沈俊榮	CONFIRM	張奕銨	DESIGN	許志誠

新巨企業股份有限公司

ZIPPY TECHNOLOGY CORP.

ver02