ZIPPY TECHNOLOGY CORP.

10F, NO.50, MIN CHYUAN ROAD,
SHIN-TIEN CITY, TAIPEI COUNTY,
TAIWAN, R.O.C

TEL: 886-2-2918-8512 / 886-2-2918-0603
FAX: 886-2-2915-5765 / 886-22916-0215
Http://www.zippy.com.tw

APPROVED DATA SHEET

Model: 1000110624(DM-03S-8E-Z)

ISSUED DATE: 2023.08.19
APPROVED NO.: 1000110624.F

The undersigned guarantee of the model switches is meets the following specifications.

1.Operation Characteristics

Operating Force (OF)	:	Max. 60 gf
Releasing Force (RF)	:	Min. 8 gf
Free Position (FP)	:	Max. 10.8 mm
Operating Position (OP)	:	8.2±0.8 mm
Movement Differential (MD)	:	Max. 1.2 mm
Over-travel (OT)	:	Min. 0.5 mm
Pre-travel (PT)	:	Max. 3.4 mm

2. Specifications

Initial Contact Resistance	:	Max. 30 mΩ . (Measured by ohm meter –Open Voltage<1VDC, Driver current -100mA) Before measure the switch contact resistance, please press the switch three times on and off.
Initial Dielectric Strength	:	1,000VAC(50-60HZ)/minute between contacts. 1,500VAC(50-60HZ)/minute between Live-parts and dead metal parts.
Insulation Resistance	:	Min. 100 MΩ (500 VDC/ minute) between Live-parts and dead metal parts.
Circuit Arrangement	:	SPDT (Single pole double throw)
Rating	:	3A 125VAC
Service Life	:	Min. 10,000 operations
Rating Load	:	Resistive Load
Operating Frequency	:	10~30 operations per minute.
Safety Certificate	:	UL, cUL, ENEC
Mechanical Service Life	:	Min. 1,000,000 operations.
Operating Frequency	:	Max. 120 operations per minute.

Operating application of the switch : Set the switch pushing distance from 60% to 90% of the specified OT value.

ZIPPY TECHNOLOGY CORP.

10F, NO.50, MIN CHYUAN ROAD,
SHIN-TIEN CITY, TAIPEI COUNTY,
TAIWAN, R.O.C

TEL: 886-2-2918-8512 / 886-2-2918-0603
FAX: 886-2-2915-5765 / 886-22916-0215
Http://www.zippy.com.tw

APPROVED DATA SHEET

Model: 1000110624(DM-03S-8E-Z)

ISSUED DATE: 2023.08.18
APPROVED NO.: 1000110624.F

3. Environments

Operating Temperature	:	-40℃ ~ 65℃(with no icing)
Vibration Resistance	:	10~55Hz, displacement 0.75mm(p-p)
Shock Resistance	:	Destruction: 1,000 m/s^2 {approx. 100G} max. Malfunction: 300 m/s^2 {approx. 30G} max.

(For the pin plunger models, the vibration & shock condition apply for use at the free position and total travel position)
(For the lever models, the vibration & shock condition apply for use at the total travel position)

Soldering by hand	:	300℃ maximum within 5 seconds.
Soldering bath	:	260℃ maximum within 5 seconds.

4. Caution:

Micro Switch Cautions

or click the link→ https://www.zippy.com/ecmodelcautions/micro_switch_cautions.pdf

ZIPPY TECHNOLOGY CORP.
卓妍蓁

PREPARED
黃俊嘉

CHECKED
倪有庭

APPROVED

Dimensions drawing

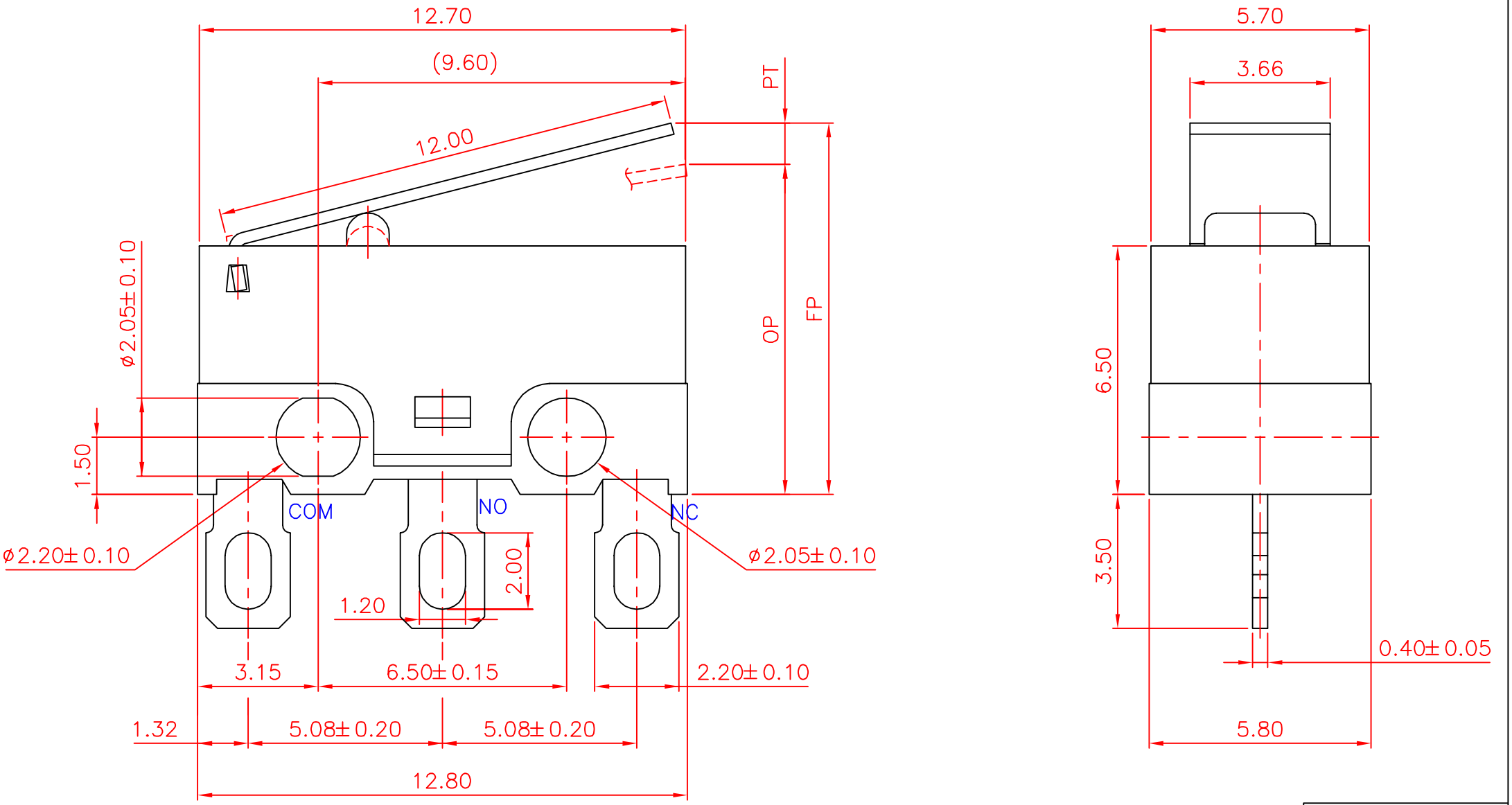

Tolerance
X.X ±0.2
XX.X ±0.4

VIEW		SIZE	A4	UNIT	mm
DATE	Jan 12,2012	VER.	1.2	FILE NAME	DM-08E0
APPROVAL	李金龍	CONFIRM	張哲維	DESIGN	黃俊嘉

新巨企業股份有限公司 ZIPPY TECHNOLOGY CORP.

Marking drawing

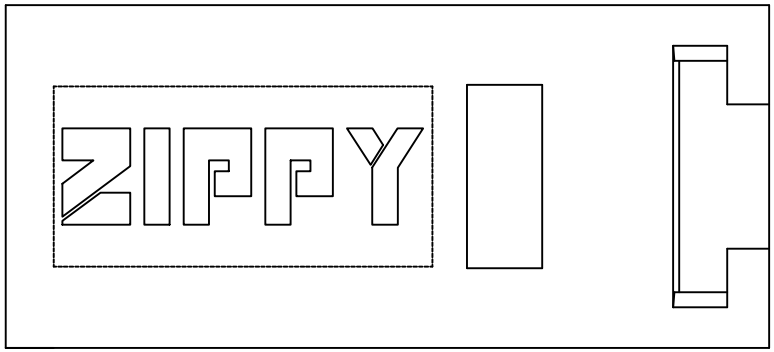

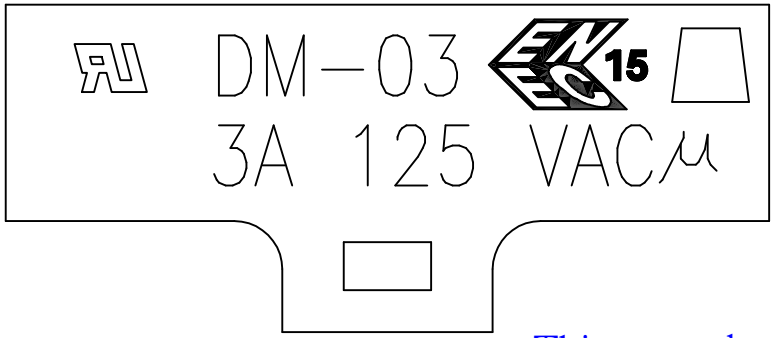

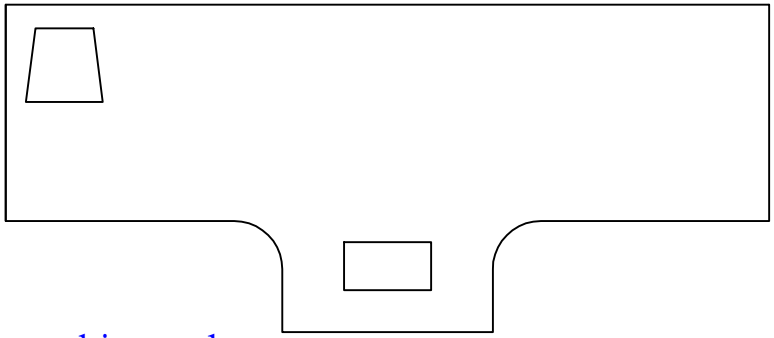

This page shows switch marking only.
此頁僅顯示開關印字，外觀參照外觀圖
Marking will be randomly on side A or side B
印字可為A面或B面
Marking can either be printed or molded
印字可為印刷或模刻

VIEW		SIZE	A4	UNIT	mm
DATE	2020.11.10	VER.	1.5	FILE NAME	DM-03-02
APPROVAL	倪有庭	CONFIRM	歐大揮	DESIGN	黃俊嘉

新巨企業股份有限公司 ZIPPY TECHNOLOGY CORP.

ver02