ZIPPY TECHNOLOGY CORP.

10F, NO.50, MIN CHYUAN ROAD,
SHIN-TIEN CITY, TAIPEI COUNTY,
TAIWAN, R.O.C

TEL: 886-2-2918-8512 / 886-2-2918-0603
FAX: 886-2-2915-5765 / 886-22916-0215
Http://www.zippy.com.tw

APPROVED DATA SHEET

Model: 1001530255(DF3-05S0-01D0C1-0A-Z)

ISSUED DATE: 2023.08.25
APPROVED NO.: 1001530255.C

The undersigned guarantee of the model switches is meets the following specifications.

1.Operation Characteristics

Operating Force (OF)	:	Max. 56 gf
Releasing Force (RF)	:	Min. 8 gf
Free Position (FP)	:	Max. 10.1 mm
Operating Position (OP)	:	8.2±0.8 mm
Movement Differential (MD)	:	Max. 0.8 mm
Over-travel (OT)	:	Min. 0.6 mm
Pre-travel (PT)	:	Max. 3.4 mm

2. Specifications

Initial Contact Resistance	:	Max. 100 mΩ . (Measured by ohm meter –Open Voltage<1VDC, Driver current -100mA) Before measure the switch contact resistance, please press the switch three times on and off.
Initial Dielectric Strength	:	500VAC(50-60HZ)/minute between contacts. 1500VAC(50-60HZ)/minute between Live-parts and dead metal parts.
Insulation Resistance	:	Min. 100 MΩ (500 VDC/ minute) between Live-parts and dead metal parts.
Circuit Arrangement	:	SPDT (Single pole double throw)
Rating	:	5A 125/250VAC ; 3A 24VDC
Service Life	:	Min.10,000 operations
Rating Load	:	Resistive Load
Operating Frequency	:	10~30 operations per minute
Safety Certificate	:	UL, cUL, ENEC
Mechanical Service Life	:	Min. 5,000,000 operations.
Operating Frequency	:	Max. 120 operations per minute

Operating application of the switch : Set the switch pushing distance from 60% to 90% of the specified OT value.

ZIPPY TECHNOLOGY CORP.

10F, NO.50, MIN CHYUAN ROAD,
SHIN-TIEN CITY, TAIPEI COUNTY,
TAIWAN, R.O.C

TEL: 886-2-2918-8512 / 886-2-2918-0603
FAX: 886-2-2915-5765 / 886-22916-0215
Http://www.zippy.com.tw

APPROVED DATA SHEET

Model: 1001530255(DF3-05S0-01D0C1-0A-Z)

ISSUED DATE: 2023.08.25
APPROVED NO.: 1001530255.C

3. Environments

Operating Temperature	:	-40℃ ~ 85℃ (with no icing)
Vibration Resistance	:	10~55Hz, displacement 0.75mm(p-p)
Shock Resistance	:	Destruction: 1,000 m/s^2 {approx. 100G} max. Malfunction: 300 m/s^2 {approx. 30G} max.

(For the pin plunger models, the vibration & shock condition apply for use at the free position and total travel position)

(For the lever models, the vibration & shock condition apply for use at the total travel position)

Soldering by hand	:	260℃ maximum within 5 seconds. 300℃ maximum within 3 seconds.
Soldering bath	:	260℃ maximum within 5 seconds. (PCB thickness more than Min 1.6 mm.)

4. Caution:

Micro Switch Cautions

or click the link→ https://www.zippy.com/ecmodelcautions/micro_switch_cautions.pdf

5. Product Drawing

Dimensions drawing

Marking drawing

ZIPPY TECHNOLOGY CORP.
簡素玲

PREPARED
林佩貞

CHECKED
王永輝

APPROVED

Dimensions drawing

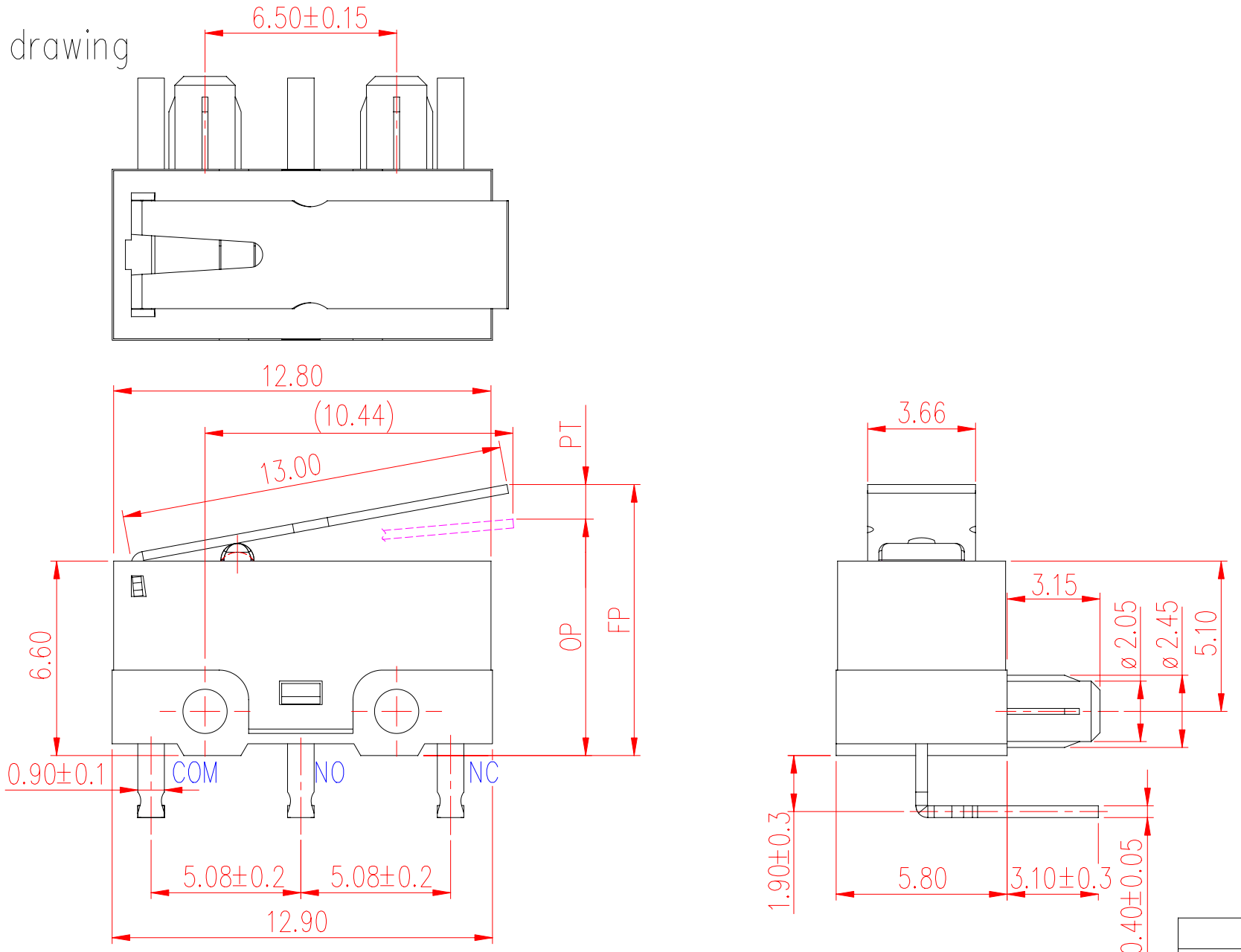

Tolerance	
X.X	± 0.2
XX.X	± 0.4

1				
	DATE	APPROVAL	DESIGN	ENGINEERING CHANGE DESCRIPTION

新巨企業股份有限公司 ZIPPY TECHNOLOGY CORP.

VIEW		SIZE	A4	UNIT	mm
DATE	FEB-02-2015	VER.	1.0	FILE NAME	DF3-01D0C1-0A
APPROVAL	張哲維	CONFIRM	王永輝	DESIGN	倪有庭

Marking drawing

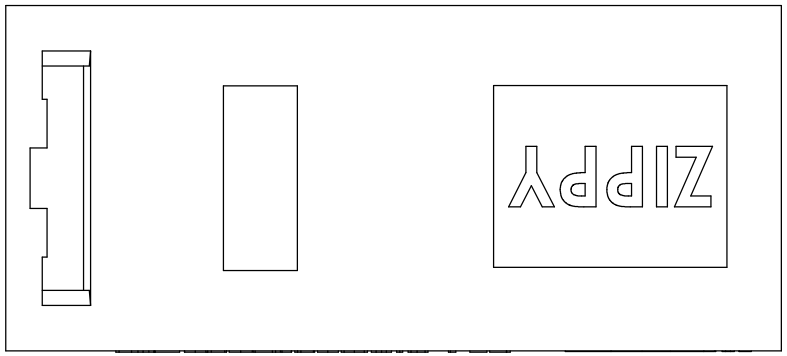

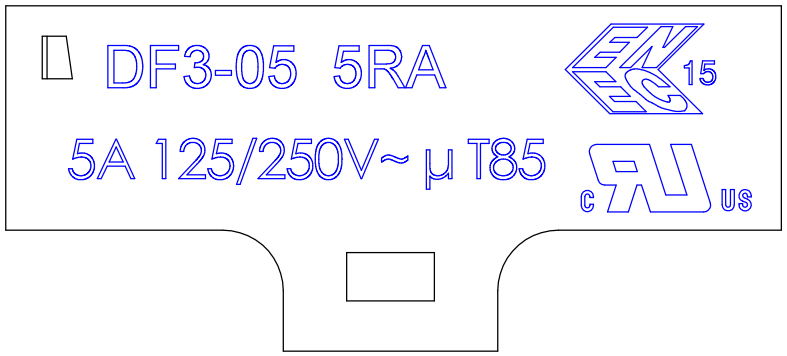

This page shows switch marking only.
此頁僅顯示開關印字，外觀參照外觀圖
Marking will be randomly on side A or side B
印字可為A面或B面
Marking can either be printed or molded
印字可為印刷或模刻

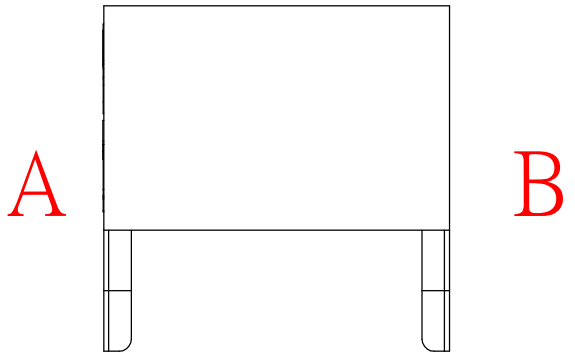

新巨企業股份有限公司 ZIPPY TECHNOLOGY CORP.

VIEW		SIZE	A4	UNIT	mm
DATE	2020.11.10	VER.	1.6	FILE NAME	DF3-05
APPROVAL	倪有庭	CONFIRM	王永輝	DESIGN	林佩貞